Robotiq
966 Chemin Olivier #500
G7A 2N1 Saint-Nicolas, Québec
Canada
Phone +1 (418) 380-2788

2022.0.3

Project description	Palletizing
Job number	PAL-AE05
Project name	PE Solution
Modification date	2022-01-10
Revision	Rev C
Power supply	100-240 VAC / 50-60 Hz
Input lead	15A
Control voltage	24 VDC

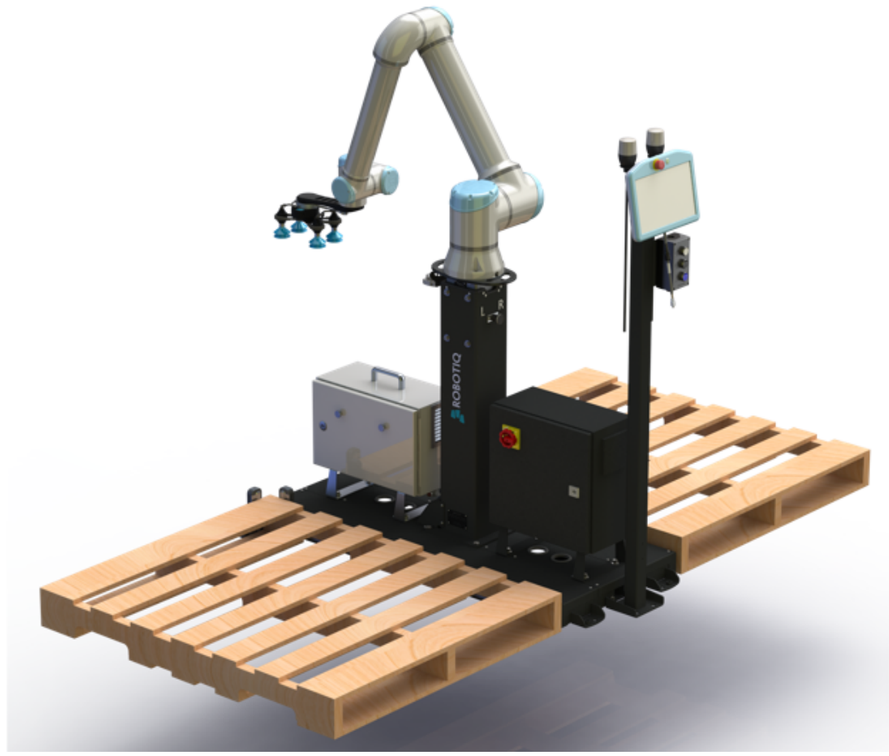

Created on	2021-10-13		
Edit date	2022-01-10	by (short name)	Michael Goidin

Number of pages 37

2

Rev C	2021-11-30	Michael Goidin	Date	2021-12-15
Rev B	2021-10-27	Michael Goidin	Created by	Michael Goidin
Rev A	2021-10-27	Michael Goidin	Approved by	
Modification	Date	Name	Revision	Rev C

Palletizing

Title page / cover sheet

PAL-AE05

Folio 1

Table of contents

Table of contents Robotiq

Higher-level function	Mounting location:	Page	Page description	Date	Edited by
		1	Title page / cover sheet	2021-12-15	Michael Goidin
		2	Table of contents	2022-01-10	Michael Goidin
		2.a	Table of contents	2022-01-10	Michael Goidin
		3	Revision overview : =3D_Views+CAB1/53 - =SYS+CAB1/14	2022-01-10	Michael Goidin
		3.a	Revision overview : =SYS+CAB1/16 - =Reports+CAB1/204	2022-01-10	Michael Goidin
		3.b	Revision overview : =Reports+CAB1/151 - =+	2022-01-10	Michael Goidin
		4	Safety	2021-12-15	Michael Goidin
		5	Technical Notes	2021-12-15	Michael Goidin
		6	System Overview	2021-12-15	Michael Goidin
SYS	CAB1		Cabinet 1		
		10	AC Voltage Supply	2022-01-10	Michael Goidin
		12	DC Voltage Supply	2021-12-15	Michael Goidin
		13	PLC - Inputs	2021-12-15	Michael Goidin
		14	PLC - Outputs	2021-12-15	Michael Goidin
		15	Pallet Sensing	2021-12-15	Michael Goidin
		16	System Options	2021-12-15	Michael Goidin
3D_Views	CAB1		Cabinet 1		
		50	General Views	2022-01-10	Michael Goidin
		51	External Views	2022-01-10	Michael Goidin
		52	Mounting Plate	2022-01-10	Michael Goidin
		53	Cutouts		
3D_Views	Box				
		54	Pushbuttons Box	2022-01-10	Michael Goidin
Reports	CAB1		Cabinet 1		
		100	Parts list : PXC.3022276 - OMR.D2HW-C273MR	2022-01-10	Michael Goidin
		101	Parts list : OMR.D2HW-C273MR - ROB.PAL-AE059	2021-12-15	Michael Goidin
		102	Parts list : ROB.PAL-AE060 - PXC.1522516	2021-12-15	Michael Goidin
		103	Parts list : LAPP.601805 - SCH.6051.2109	2021-12-15	Michael Goidin

Table of contents

Table of contents Robotiq

Higher-level function	Mounting location:	Page	Page description	Date	Edited by
Reports	CAB1		Cabinet 1		
		104	Parts list : PXC.1419690 - PXC.3030514	2021-12-15	Michael Goidin
		150	Summarized parts list	2022-01-10	Michael Goidin
		151	Summarized parts list	2021-12-15	Michael Goidin
		200	Terminal diagram =SYS+CAB1-X1	2021-12-15	Michael Goidin
		202	Terminal diagram =SYS+CAB1-X25	2021-12-15	Michael Goidin
		203	Terminal diagram =SYS+CAB1-X26	2021-12-15	Michael Goidin
		204	Terminal diagram =SYS+CAB1-X50	2021-12-15	Michael Goidin
		205	Terminal diagram =SYS+CAB1-XE	2021-12-15	Michael Goidin
		300	Cable diagram:W1 :W2 :W50 :W51	2021-12-15	Michael Goidin
		301	Cable diagram:W52 :W53 :W60 :W61	2021-12-15	Michael Goidin
		302	Cable diagram:W62 :W63 :W70 :W80	2021-12-15	Michael Goidin
		303	Cable diagram:W100 :W101 :W103	2021-12-15	Michael Goidin
		400	Connection list : 1 - 51	2022-01-10	Michael Goidin

Rev C	2021-11-30	Michael Goidin	Date	2022-01-10
Rev B	2021-10-27	Michael Goidin	Created by	Michael Goidin
Rev A	2021-10-27	Michael Goidin	Approved by	
Modification	Date	Name	Revision	Rev C

Palletizing

ROBOTIQ

Table of contents

PAL-AE05

Folio 2.a

Page 3 / 37

Revision overview

Revision name Rev C

Index	Page name	Date	Creator	Revision description	Reason for revision change
	=3D_Views+CAB1/53	2022-01-10	Michael Goidin	New page created	
02	/6	2021-12-15	Michael Goidin	Teach pendant position Add pushbuttons box	
02	/6	2021-12-15	Michael Goidin	Teach pendant position Add pushbuttons box	
02	=SYS+CAB1/16	2021-12-15	Michael Goidin	Teach pendant position Add pushbuttons box	
02	=SYS+CAB1/16	2021-12-13	Michael Goidin	Teach pendant position Add pushbuttons box	

Revision name Rev B

Index	Page name	Date	Creator	Revision description	Reason for revision change
02	=+ (CAB1)	2021-11-30	Michael Goidin	Teach pendant position Add pushbuttons box	
02	=3D_Views+CAB1/51	2021-11-30	Michael Goidin	Teach pendant position Add pushbuttons box	
02	=Reports+CAB1/150	2021-11-30	Michael Goidin	Teach pendant position Add pushbuttons box	
02	=3D_Views+CAB1/51	2021-11-30	Michael Goidin	Teach pendant position Add pushbuttons box	
02	=Reports+CAB1/151	2021-11-30	Michael Goidin	Teach pendant position Add pushbuttons box	
02	=Reports+CAB1/200	2021-11-30	Michael Goidin	Teach pendant position Add pushbuttons box	
02	=+ (CAB1)	2021-11-30	Michael Goidin	Teach pendant position Add pushbuttons box	
02	=3D_Views+CAB1/52	2021-11-30	Michael Goidin	Teach pendant position Add pushbuttons box	
02	=3D_Views+CAB1/50	2021-11-30	Michael Goidin	Teach pendant position Add pushbuttons box	
02	=Reports+CAB1/102	2021-11-30	Michael Goidin	Teach pendant position Add pushbuttons box	
02	=SYS+CAB1/10	2021-11-30	Michael Goidin	Teach pendant position Add pushbuttons box	
02	=Reports+CAB1/100	2021-11-30	Michael Goidin	Teach pendant position Add pushbuttons box	
02	=Reports+CAB1/103	2021-11-30	Michael Goidin	Teach pendant position Add pushbuttons box	
02	=3D_Views+CAB1/52	2021-11-18	Michael Goidin	Teach pendant position Add pushbuttons box	
02	=3D_Views+CAB1/51	2021-11-18	Michael Goidin	Teach pendant position Add pushbuttons box	
02	=SYS+CAB1/12	2021-11-18	Michael Goidin	Teach pendant position Add pushbuttons box	
02	=SYS+CAB1/13	2021-11-18	Michael Goidin	Teach pendant position Add pushbuttons box	
02	=SYS+CAB1/14	2021-11-18	Michael Goidin	Teach pendant position Add pushbuttons box	

Revision overview

Revision name Rev B

Index	Page name	Date	Creator	Revision description	Reason for revision change
02	=SYS+CAB1/16	2021-11-18	Michael Goidin	Teach pendant position Add pushbuttons box	
02	=3D_Views+CAB1/50	2021-11-18	Michael Goidin	Teach pendant position Add pushbuttons box	
02	=Reports+CAB1/400	2021-11-18	Michael Goidin	Teach pendant position Add pushbuttons box	
02	=Reports+CAB1/203	2021-11-15	Michael Goidin	Teach pendant position Add pushbuttons box	
02	=Reports+CAB1/100	2021-11-15	Michael Goidin	Teach pendant position Add pushbuttons box	
02	=3D_Views+CAB1/51	2021-11-15	Michael Goidin	Teach pendant position Add pushbuttons box	
02	=Reports+CAB1/151	2021-11-15	Michael Goidin	Teach pendant position Add pushbuttons box	
02	=Reports+CAB1/102	2021-11-15	Michael Goidin	Teach pendant position Add pushbuttons box	
02	=Reports+CAB1/150	2021-11-15	Michael Goidin	Teach pendant position Add pushbuttons box	
02	=SYS+CAB1/12	2021-11-15	Michael Goidin	Teach pendant position Add pushbuttons box	
02	=Reports+CAB1/103	2021-11-15	Michael Goidin	Teach pendant position Add pushbuttons box	
02	=SYS+CAB1/16	2021-11-15	Michael Goidin	Teach pendant position Add pushbuttons box	
02	=3D_Views+CAB1/52	2021-11-15	Michael Goidin	Teach pendant position Add pushbuttons box	
02	=3D_Views+CAB1/50	2021-11-15	Michael Goidin	Teach pendant position Add pushbuttons box	
02	=Reports+CAB1/104	2021-11-15	Michael Goidin	Teach pendant position Add pushbuttons box	
02	=Reports+CAB1/204	2021-11-15	Michael Goidin	Teach pendant position Add pushbuttons box	
02	=Reports+CAB1/303	2021-11-15	Michael Goidin	Teach pendant position Add pushbuttons box	
02	=Reports+CAB1/400	2021-11-15	Michael Goidin	Teach pendant position Add pushbuttons box	
02	=Reports+CAB1/101	2021-11-15	Michael Goidin	Teach pendant position Add pushbuttons box	
02	=+ (CAB1)	2021-11-15	Michael Goidin	Teach pendant position Add pushbuttons box	
02	/6	2021-11-03	Michael Goidin	Teach pendant position Add pushbuttons box	
02	=Reports+CAB1/102	2021-11-03	Michael Goidin	Teach pendant position Add pushbuttons box	
02	=Reports+CAB1/103	2021-11-03	Michael Goidin	Teach pendant position Add pushbuttons box	
02	=Reports+CAB1/150	2021-11-03	Michael Goidin	Teach pendant position Add pushbuttons box	
02	=Reports+CAB1/204	2021-11-03	Michael Goidin	Teach pendant position Add pushbuttons box	

Revision overview

Revision name Rev B

Index	Page name	Date	Creator	Revision description	Reason for revision change
02	=Reports+CAB1/151	2021-11-03	Michael Goidin	Teach pendant position Add pushbuttons box	
02	=Reports+CAB1/303	2021-11-03	Michael Goidin	Teach pendant position Add pushbuttons box	
02	/2	2021-11-03	Michael Goidin	Teach pendant position Add pushbuttons box	
02	/2.a	2021-11-03	Michael Goidin	Teach pendant position Add pushbuttons box	
02	/3	2021-11-03	Michael Goidin	Teach pendant position Add pushbuttons box	
02	/1	2021-11-03	Michael Goidin	Teach pendant position Add pushbuttons box	
02	=SYS+CAB1/16	2021-11-03	Michael Goidin	Teach pendant position Add pushbuttons box	
02	=Reports+CAB1/101	2021-11-03	Michael Goidin	Teach pendant position Add pushbuttons box	
	/3	2021-11-02	Michael Goidin	New page created	
02	=3D_Views+CAB1/51	2021-10-27	Michael Goidin	Teach pendant position Add pushbuttons box	
02	=3D_Views+CAB1/52	2021-10-27	Michael Goidin	Teach pendant position Add pushbuttons box	
02	=3D_Views+CAB1/50	2021-10-27	Michael Goidin	Teach pendant position Add pushbuttons box	

Revision name Rev A

Index	Page name	Date	Creator	Revision description	Reason for revision change
01	=Reports+CAB1/150	2021-10-27	Michael Goidin	First Release	
01	=Reports+CAB1/151	2021-10-27	Michael Goidin	First Release	
01	=3D_Views+CAB1/50	2021-10-27	Michael Goidin	First Release	
01	/2.a	2021-10-27	Michael Goidin	First Release	
01	/2	2021-10-27	Michael Goidin	First Release	
01	/6	2021-10-27	Michael Goidin	First Release	
01	=3D_Views+CAB1/52	2021-10-27	Michael Goidin	First Release	
01	=3D_Views+CAB1/51	2021-10-27	Michael Goidin	First Release	
01	=+ (CAB1)	2021-10-27	Michael Goidin	First Release	

SAFETY REGULATIONS

GENERAL SAFETY REGULATIONS

DANGER !

During plant operation certain items are under dangerous voltage!
Non-observance of safety instructions can result in death, serious injuries or material damage.

Only specialist personnel may carry out transport, installation and commissioning work.

The applicable valid standards as well as the national and / or company-specific accident prevention regulations are to observed.

The following safety instructions are to be observed:

The erection, commissioning, troubleshooting as well as repair of the plant may only be carried out by qualified personnel that is familiar with the corresponding operating instructions.

Mounting of the devices has to be effected in accordance with the valid standards, state and local regulations.
Proper grounding and conductor dimensioning as well as proper short-circuit proofing have to be ensured.
These measures serve to ensure the safety of the plant and of the operating personnel.

Before carrying out safety checks, maintenance work and repair measures ensure that all the power supplies are switched off, are secured against being switched on unintentionally and are marked correspondingly.

Only test devices that are in a technically perfect condition and are suitable for the respective measurement may be used to carry out measurements!

The instructions specified in the respective operating instructions are to be followed strictly!
It is mandatory that hazard, warning and safety instructions be observed!

All doors and covers are to be kept closed during the plant operation.
If cooling devices are installed in the plant, ensure that these systems operate trouble-free.
These include the regular cleaning of the filters, in as far as they exist.

WIRING REGULATIONS

(Symbols in accordance with IEC 60757)

WIRING COLORS

Main current AC	Black (BK)	Control circuit DC	Blue (BU)
Neutral conductor	Red (RD)	External voltage	Orange (OG)
Neutral conductor	Red (RD)	Jumpers	Orange (OG)
Protective wire	Green-yellow (GNYE)		

MINIMUM CROSS-SECTIONS

Main current	2,5 mm²
Control line	0,75 mm²
PLC wiring	0,75 mm²

CROSS REFERENCE AWG TO MM2

AWG	MM2
26	0.14
24	0.25
22	0.34
21	0.38
20	0.5
18	0.75
17	1
16	1.5
14	2.5
12	4
10	6
8	10
6	16

MATERIAL REGULATIONS

ENCLOSURES

Enclosures	RITTAL WM 1244.250
Enclosure protection category	NEMA 4
Enclosure color	RAL 7035
Degree of protection	IP 66

Terminals Configuration

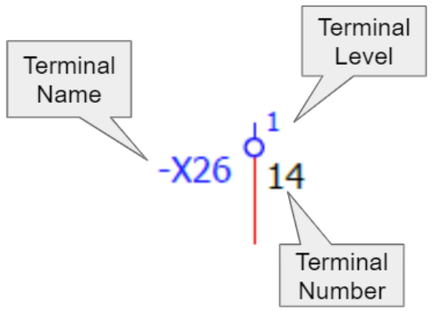

Cross-references

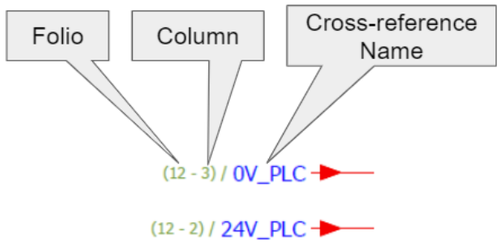

System Overview

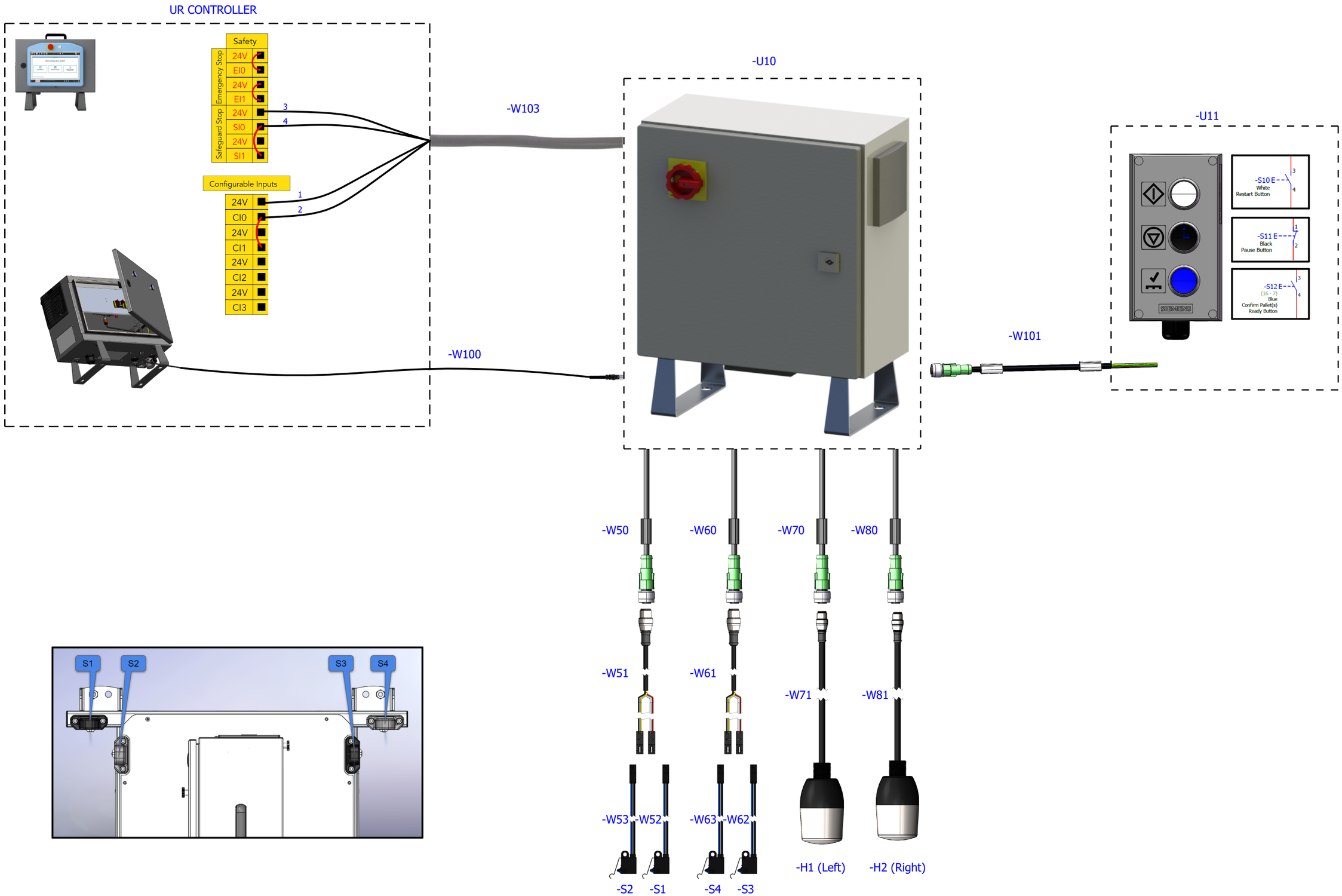

=SYS+CAB1/10

Rev C	2021-11-30	Michael Goidin	Date	2021-12-15	Palletizing	ROBOTIQ	System Overview	
Rev B	2021-10-27	Michael Goidin	Created by	Michael Goidin				
Rev A	2021-10-27	Michael Goidin	Approved by				PAL-AE05	Folio 6
Modification	Date	Name	Revision	Rev C				Page 9 / 37

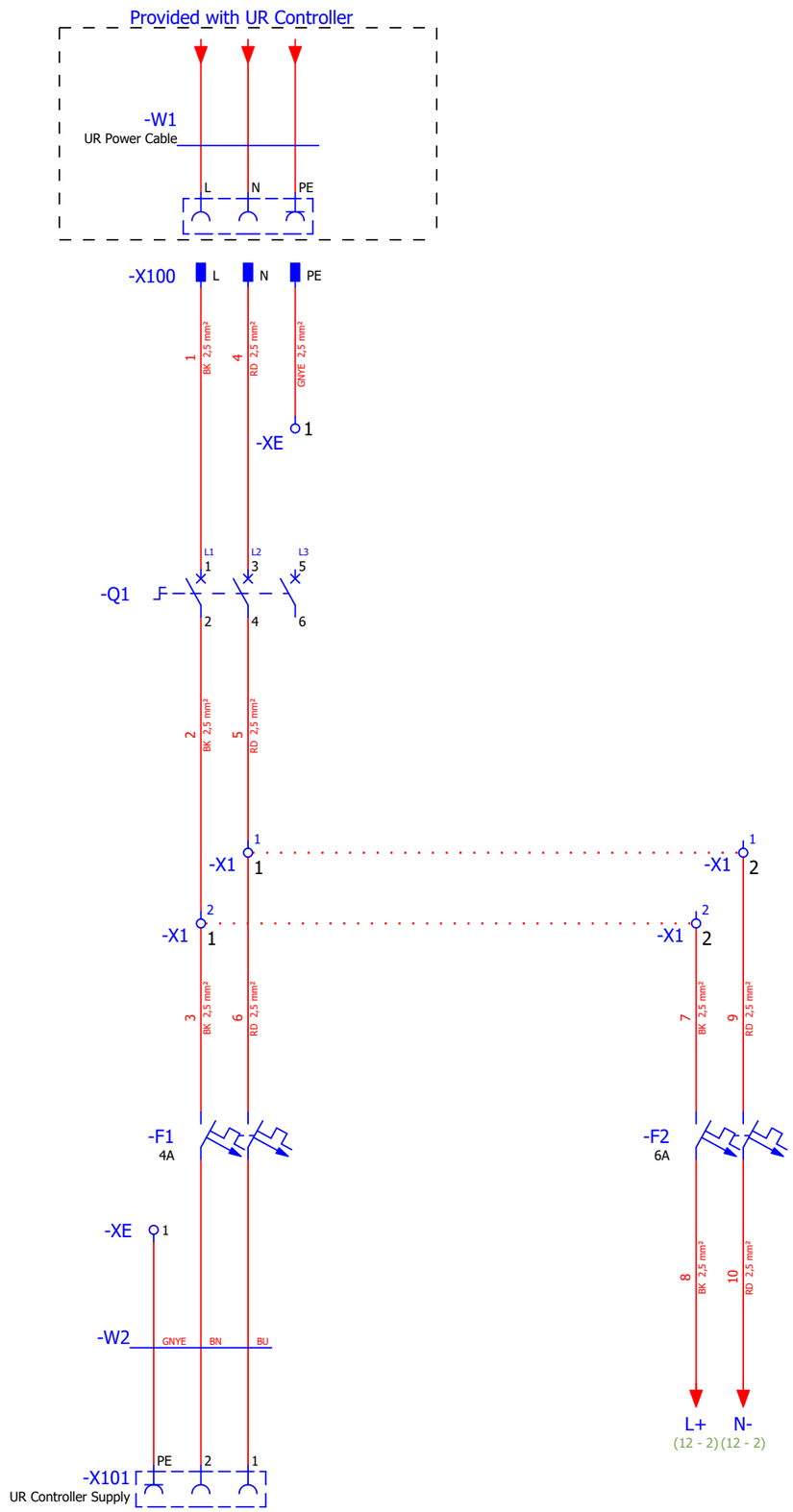

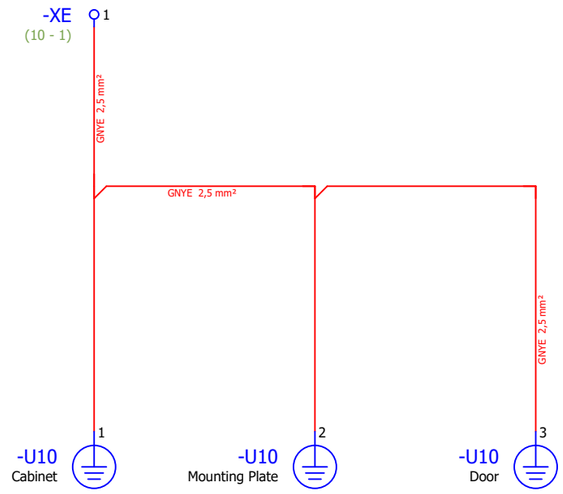

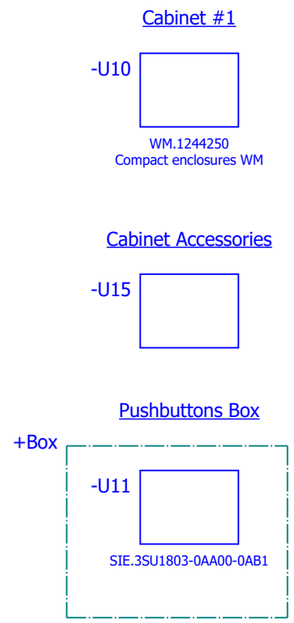

=+/6

12

Rev C	2021-11-30	Michael Goidin	Date	2021-12-15
Rev B	2021-10-27	Michael Goidin	Created by	Michael Goidin
Rev A	2021-10-27	Michael Goidin	Approved by	
Modification	Date	Name	Revision	Rev C

Palletizing

ROBOTIQ

AC Voltage Supply

PAL-AE05

Folio 10

Page 10 / 37

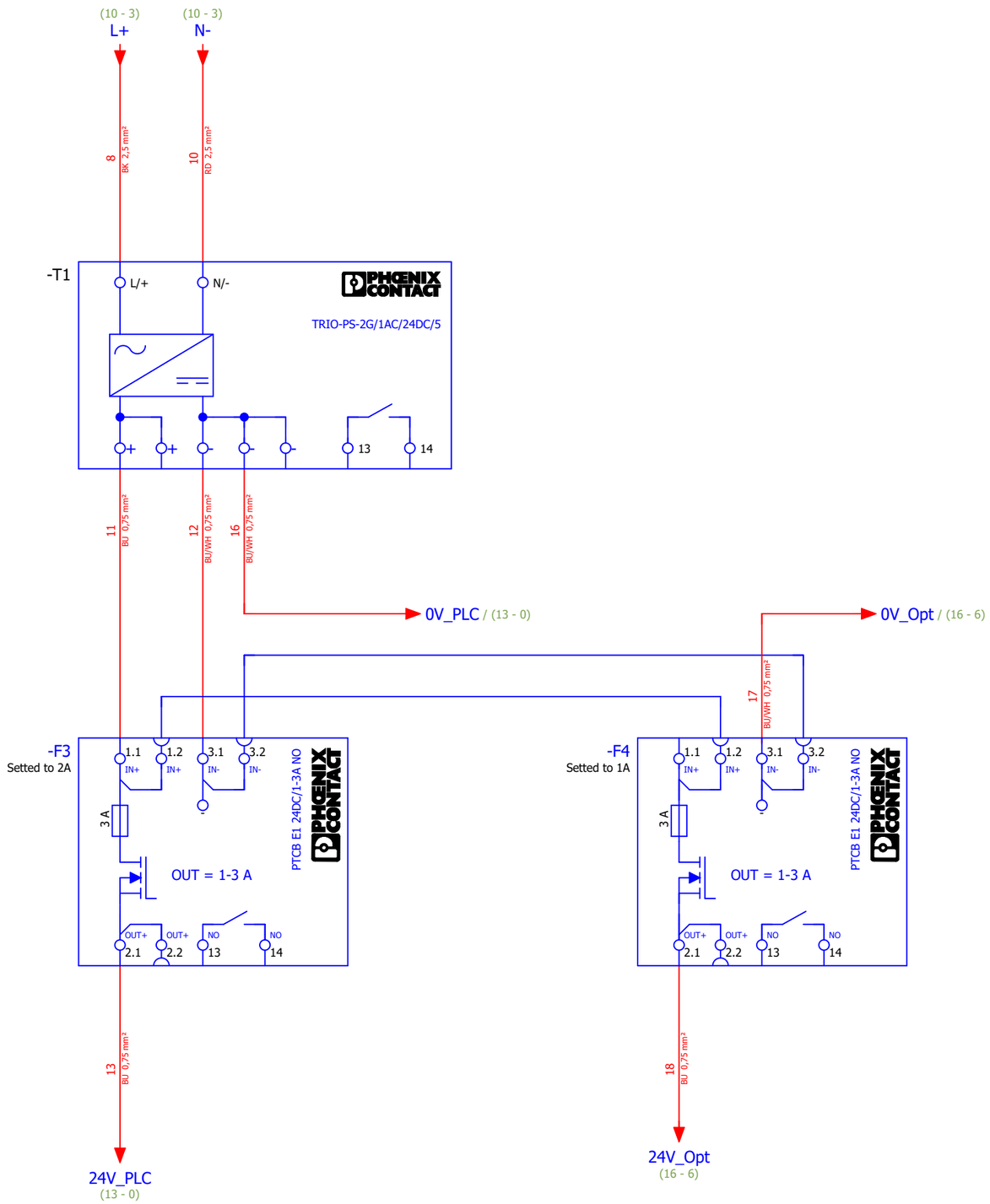

Rev C	2021-11-30	Michael Goidin	Date	2021-12-15	Palletizing	ROBOTIQ	DC Voltage Supply	
Rev B	2021-10-27	Michael Goidin	Created by	Michael Goidin				
Rev A	2021-10-27	Michael Goidin	Approved by				PAL-AE05	Folio 12
Modification	Date	Name	Revision	Rev C				Page 11 / 37

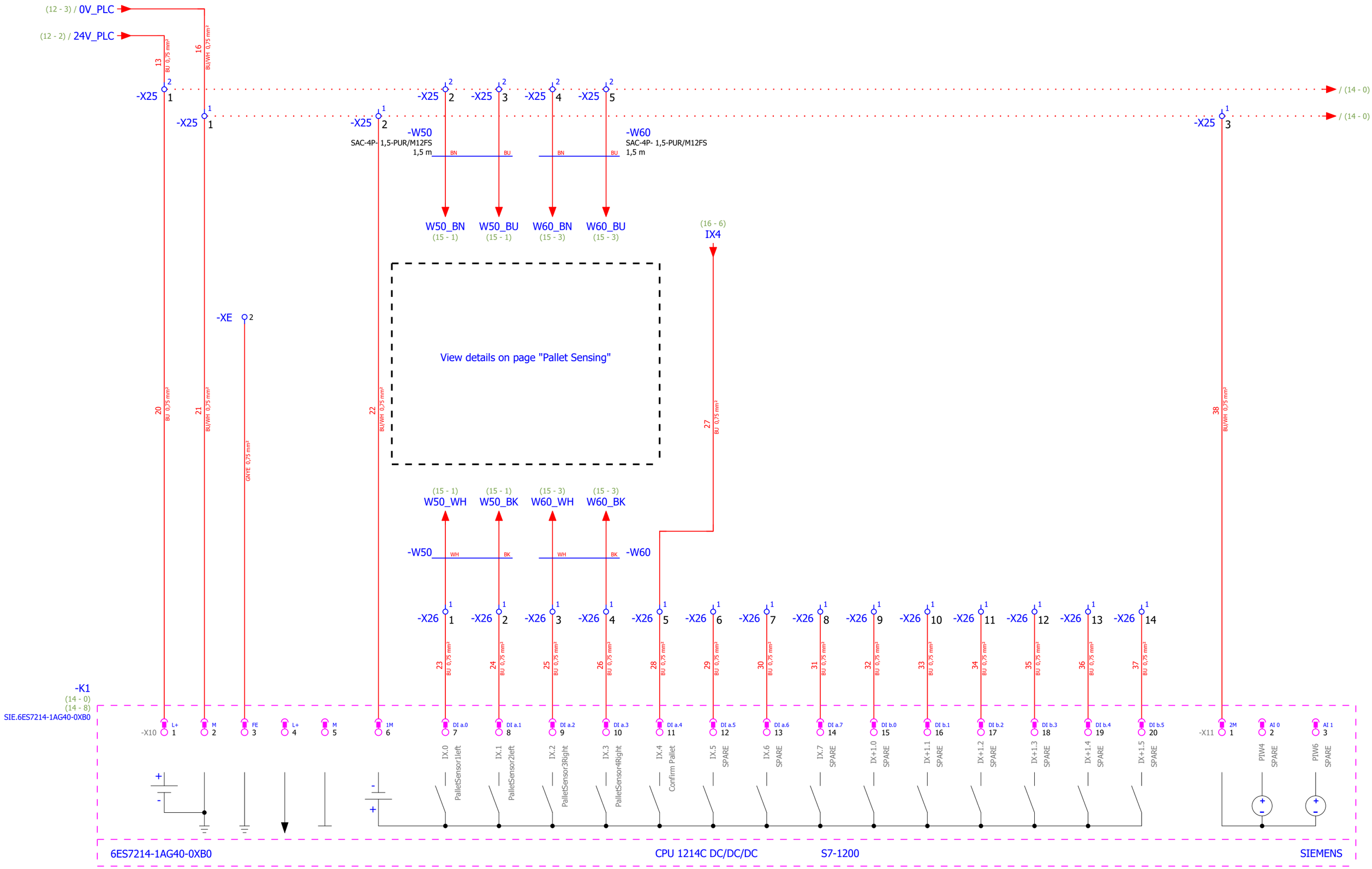

12 14

Rev C	2021-11-30	Michael Goidin	Date	2021-12-15	Palletizing	ROBOTIQ	PLC - Inputs	PAL-AE05
Rev B	2021-10-27	Michael Goidin	Created by	Michael Goidin				Folio 13
Rev A	2021-10-27	Michael Goidin	Approved by					Page 12 / 37
Modification	Date	Name	Revision	Rev C				

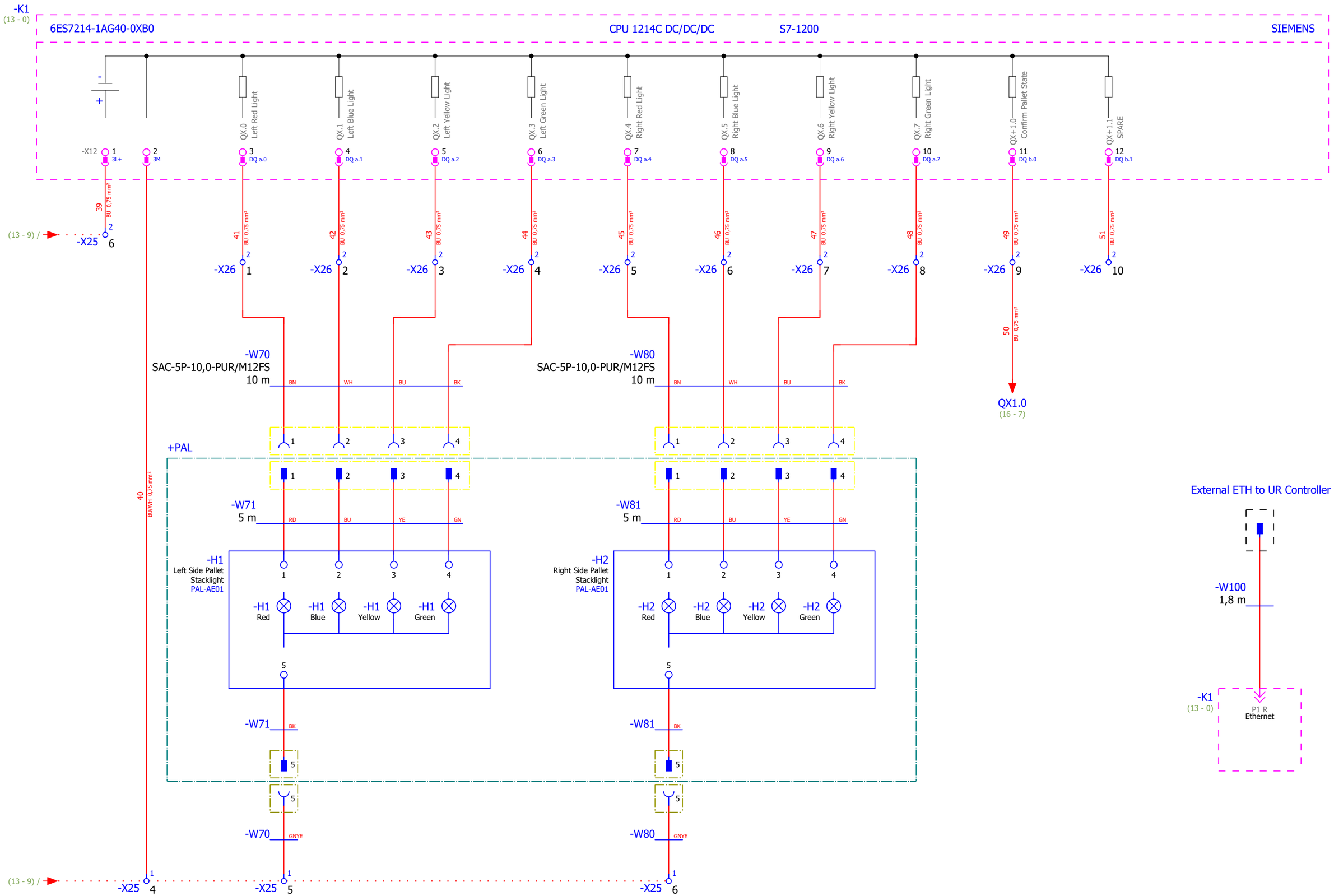

13

15

Rev C	2021-11-30	Michael Goidin	Date	2021-12-15	Palletizing	ROBOTIQ	PLC - Outputs
Rev B	2021-10-27	Michael Goidin	Created by	Michael Goidin			
Rev A	2021-10-27	Michael Goidin	Approved by				
Modification	Date	Name	Revision	Rev C			

PAL-AE05

Folio 14

Page 13 / 37

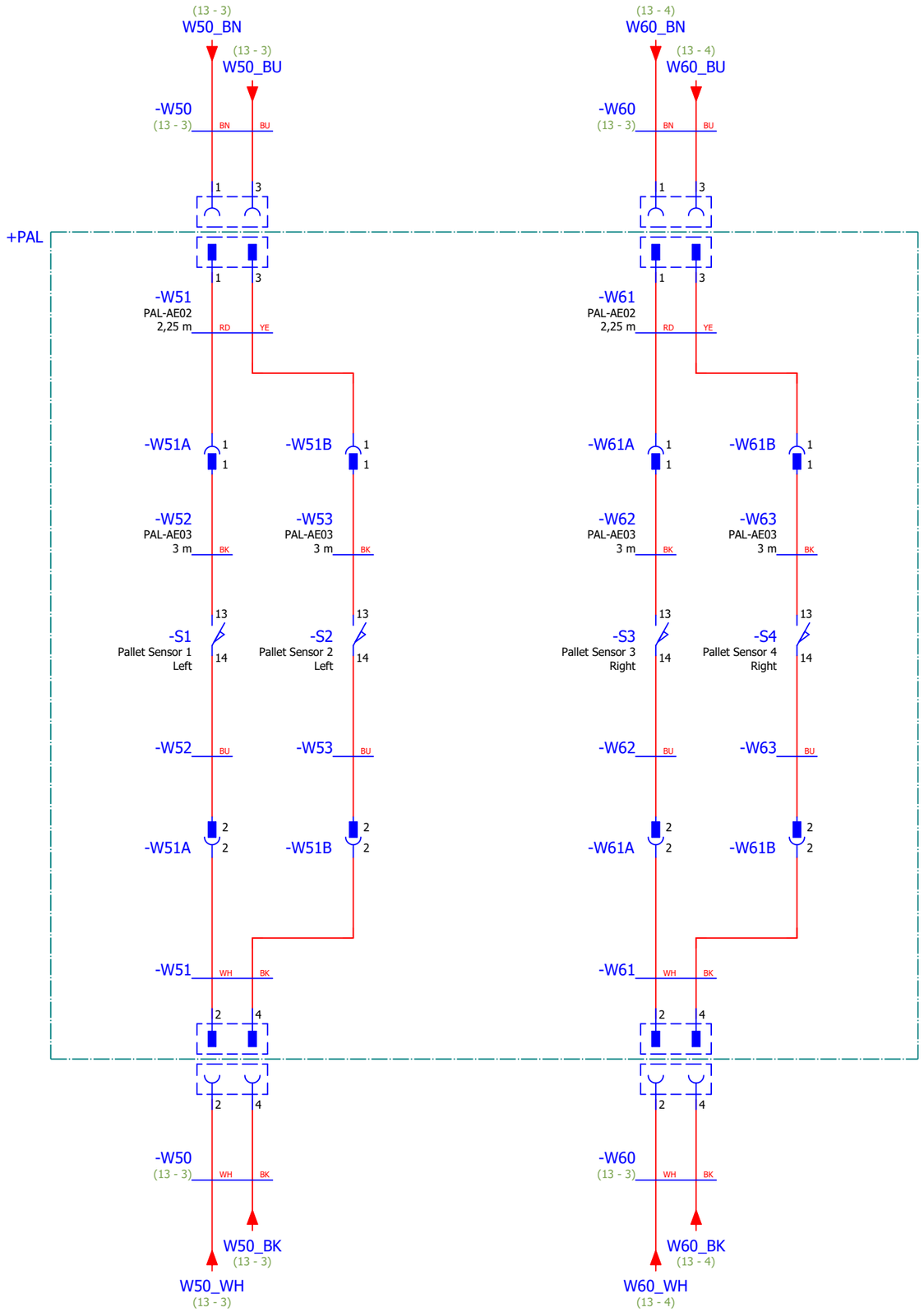

W51 / W61

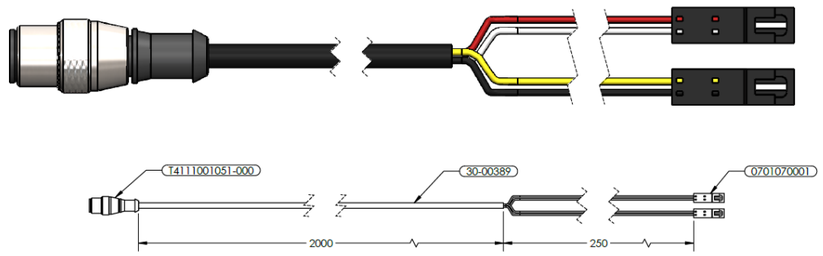

W52 / W53 / W62 / W63

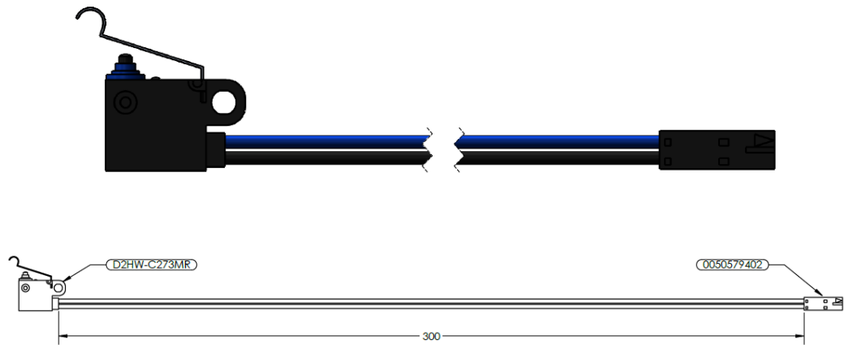

14

16

Rev C	2021-11-30	Michael Goidin	Date	2021-12-15	Palletizing	ROBOTIQ	Pallet Sensing	
Rev B	2021-10-27	Michael Goidin	Created by	Michael Goidin				
Rev A	2021-10-27	Michael Goidin	Approved by				PAL-AE05	Folio 15
Modification	Date	Name	Revision	Rev C				Page 14 / 37

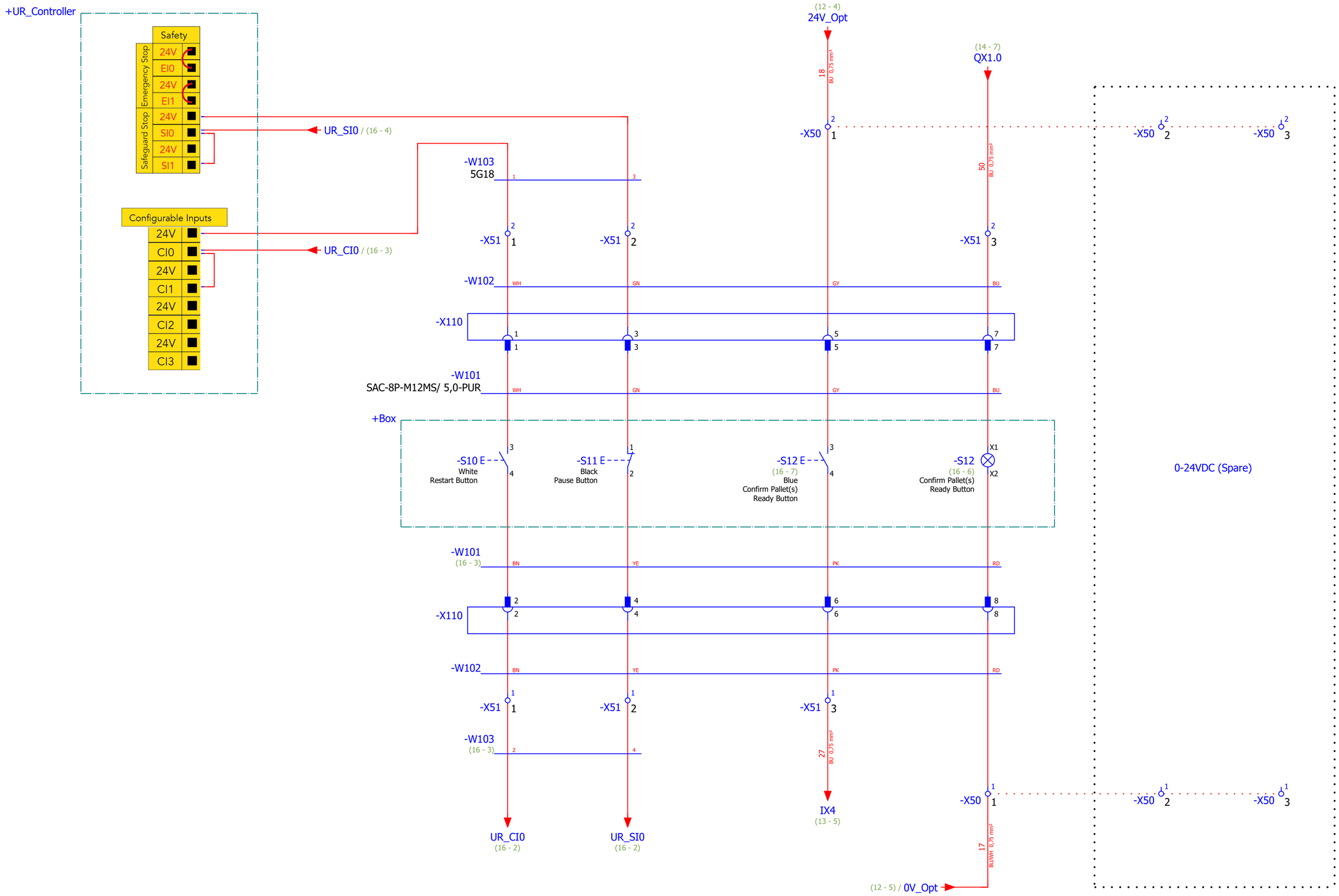

15

=3D_Views/50

Rev C	2021-11-30	Michael Goidin	Date	2021-12-15	Palletizing	ROBOTIQ	System Options	
Rev B	2021-10-27	Michael Goidin	Created by	Michael Goidin				
Rev A	2021-10-27	Michael Goidin	Approved by				PAL-AE05	Folio 16
Modification	Date	Name	Revision	Rev C				Page 15 / 37

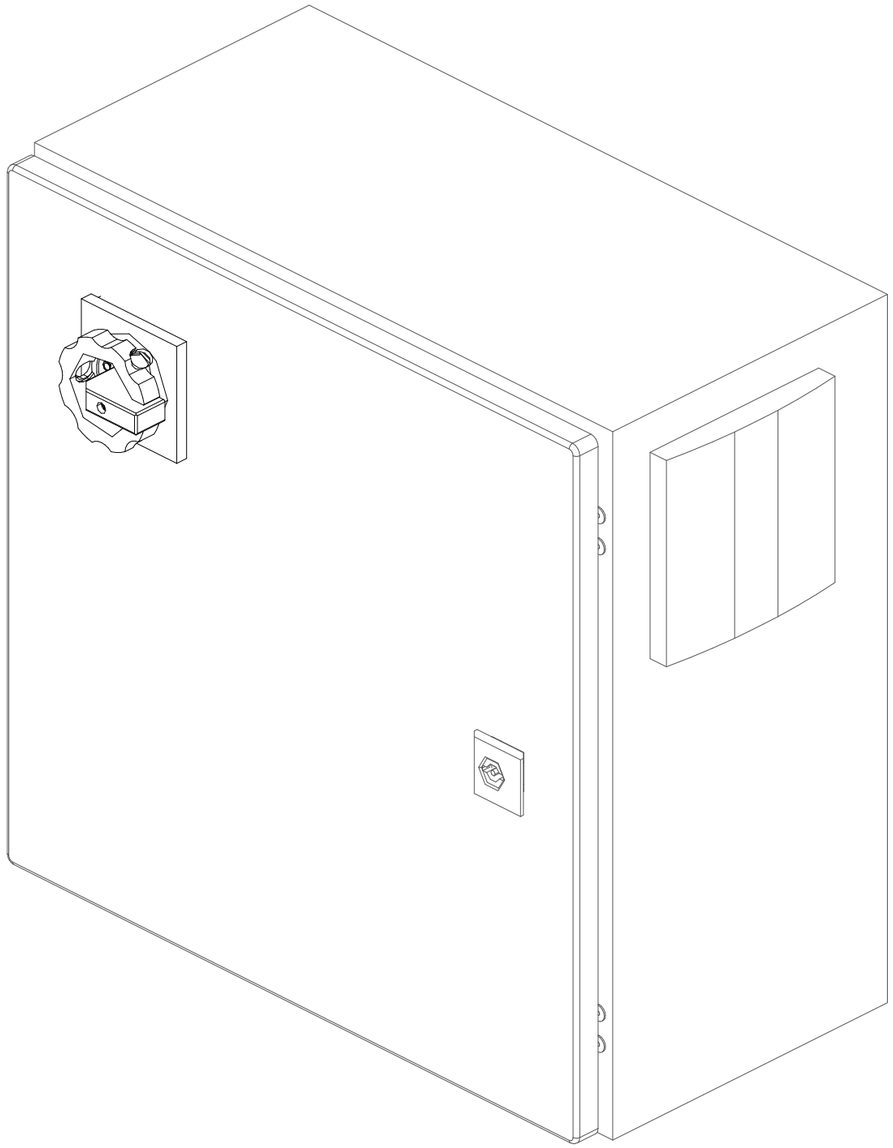

Outside

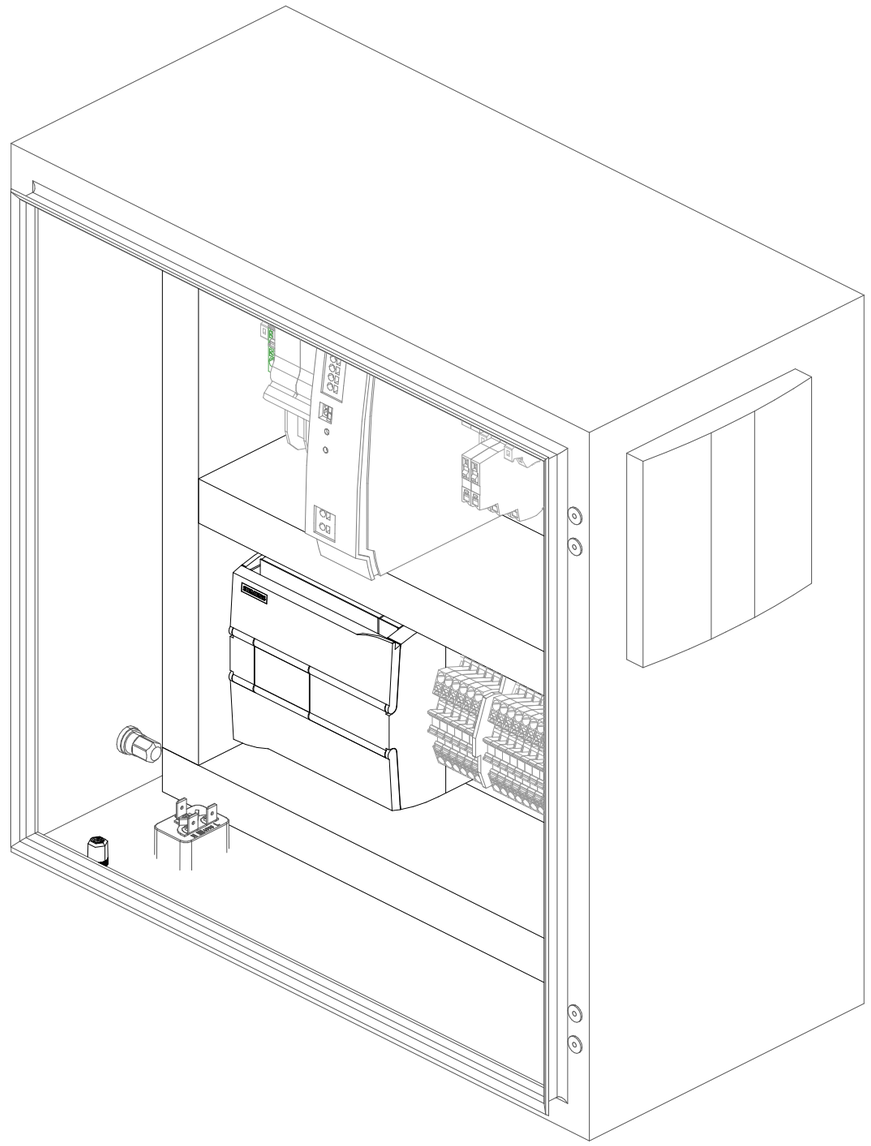

Inside

Rev C	2021-11-30	Michael Goidin	Date	2021-12-15
Rev B	2021-10-27	Michael Goidin	Created by	Michael Goidin
Rev A	2021-10-27	Michael Goidin	Approved by	
Modification	Date	Name	Revision	Rev C

Palletizing

ROBOTIQ

General Views

PAL-AE05

Folio 50

Page 16 / 37

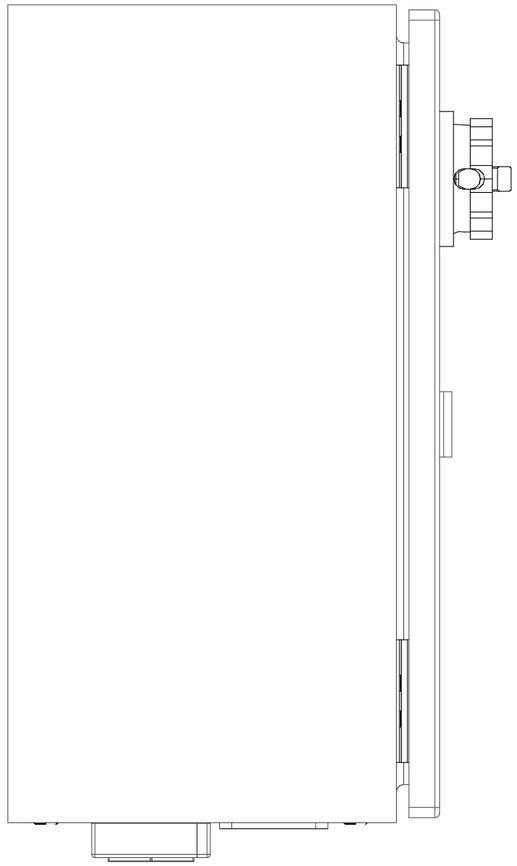

Left Side

Top

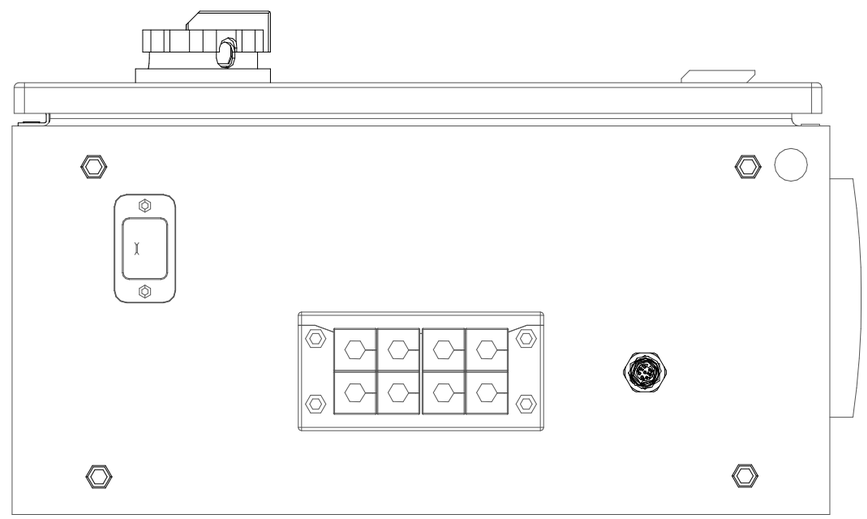

Bottom

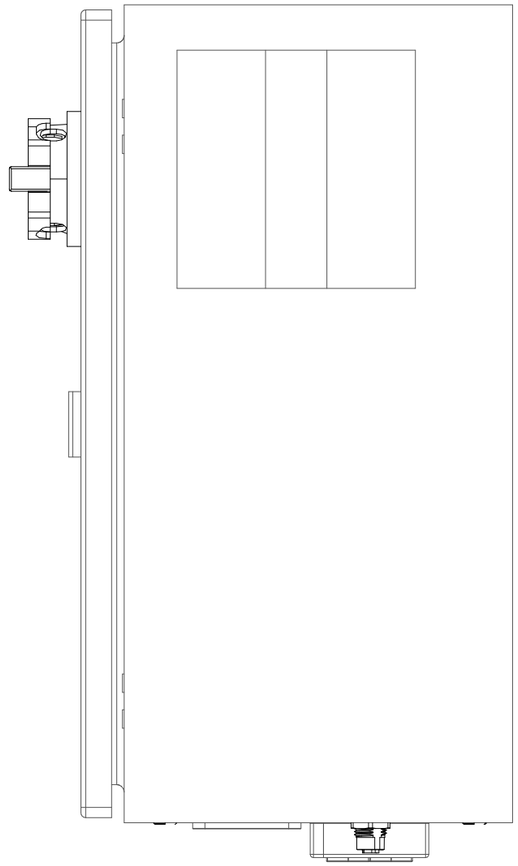

Right Side

Rev C	2021-11-30	Michael Goidin	Date	2021-12-15
Rev B	2021-10-27	Michael Goidin	Created by	Michael Goidin
Rev A	2021-10-27	Michael Goidin	Approved by	
Modification	Date	Name	Revision	Rev C

Palletizing

ROBOTIQ

External Views

PAL-AE05

Folio 51

Page 17 / 37

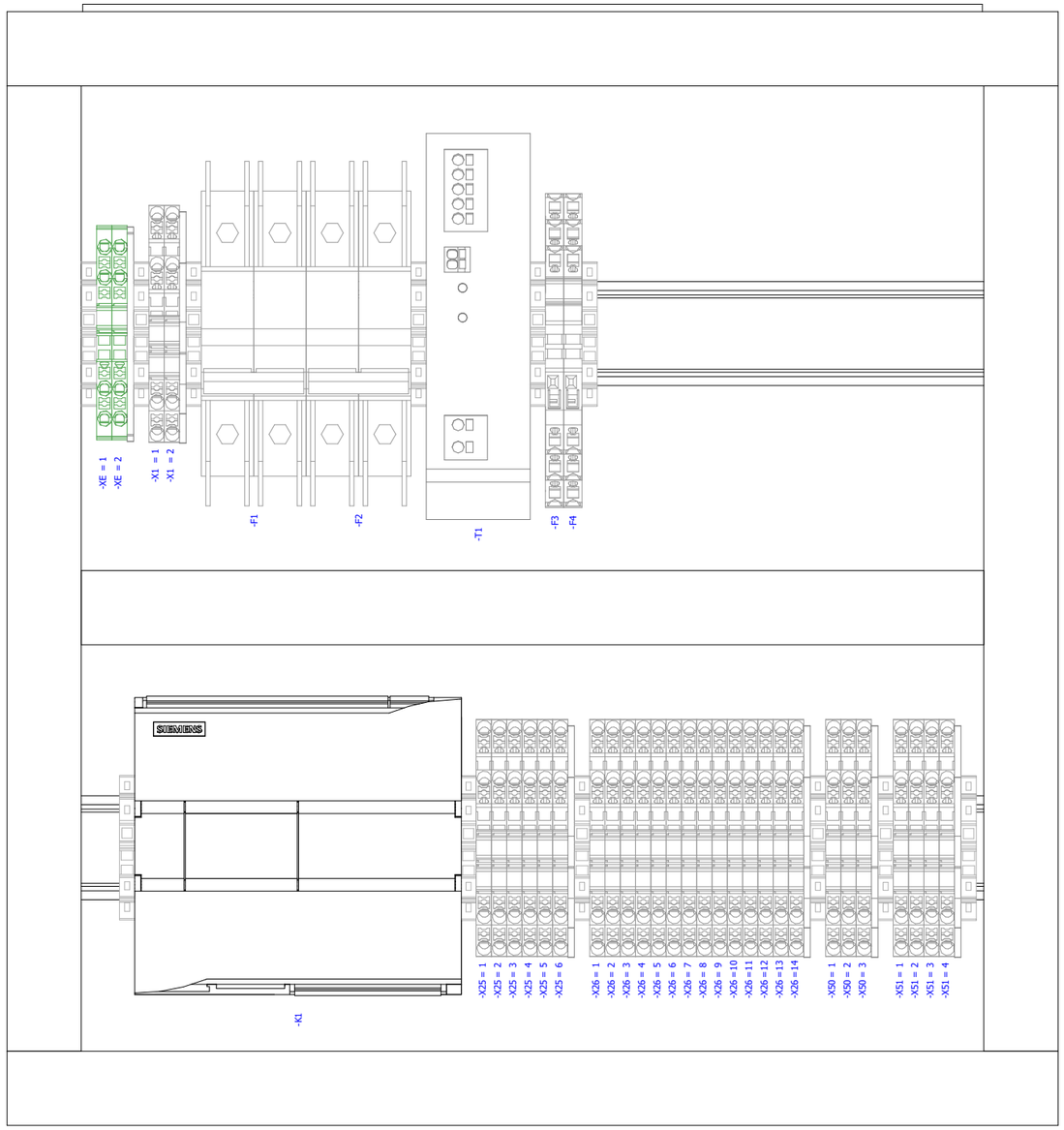

Mounting plate

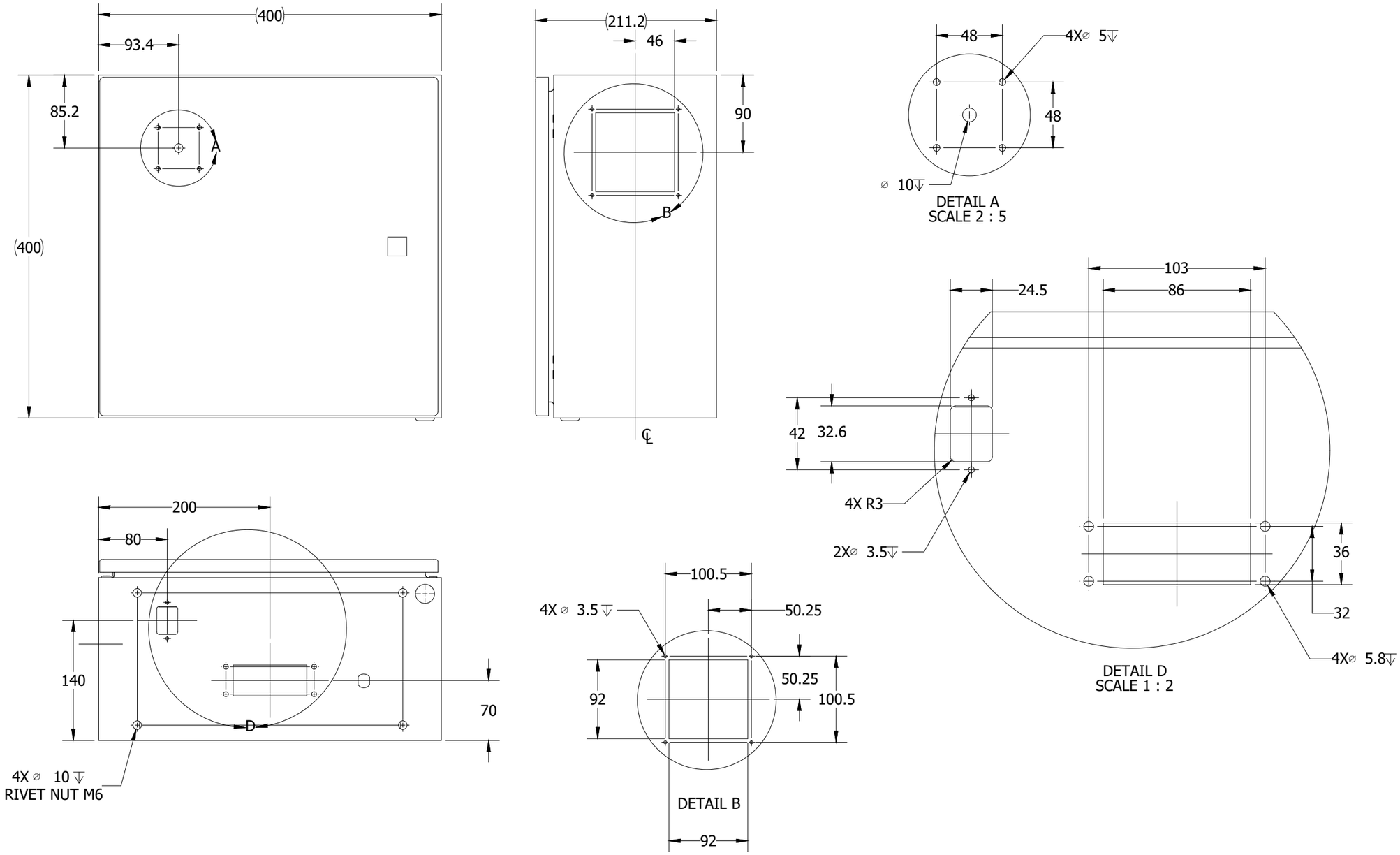

Rev C	2021-11-30	Michael Goidin	Date	2022-01-10
Rev B	2021-10-27	Michael Goidin	Created by	Michael Goidin
Rev A	2021-10-27	Michael Goidin	Approved by	
Modification	Date	Name	Revision	Rev C

Palletizing

ROBOTIQ

Cutouts

PAL-AE05

Folio 53

Page 19 / 37

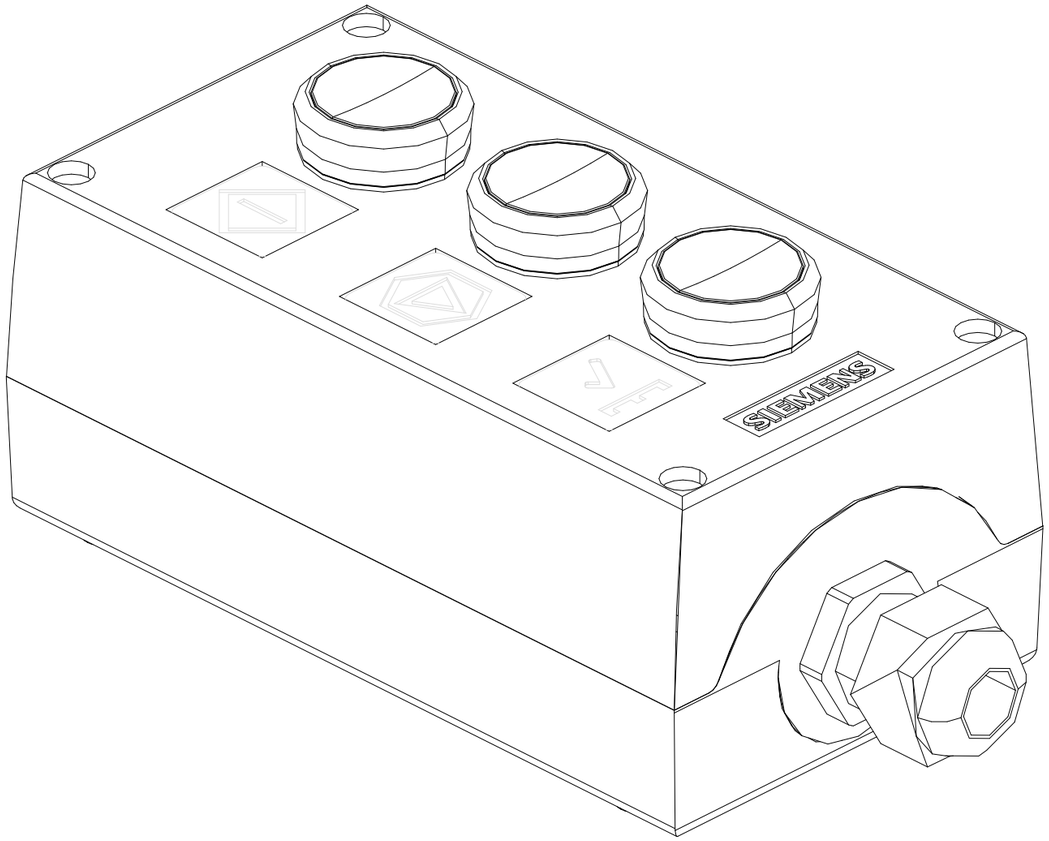

Pushbuttons

+CAB1/53

=Reports+CAB1/100

Rev C	2021-11-30	Michael Goidin	Date	2021-12-15
Rev B	2021-10-27	Michael Goidin	Created by	Michael Goidin
Rev A	2021-10-27	Michael Goidin	Approved by	
Modification	Date	Name	Revision	Rev C

Palletizing

ROBOTIQ

Pushbuttons Box

PAL-AE05

Folio 54

Page 20 / 37

Parts list

Parts List Robotiq

Device tag Placement	Qty	Designation	Order number	Manufacturer Supplier	Part number Function text
-1 (CAB1.S1)	1	End clamp CLIPFIX 35-5	3022276	Phoenix Contact PAX	PXC.3022276
-2 (CAB1.S1)	1	End clamp CLIPFIX 35-5	3022276	Phoenix Contact PAX	PXC.3022276
-3 (CAB1.S1)	1	End clamp CLIPFIX 35-5	3022276	Phoenix Contact PAX	PXC.3022276
-6 (CAB1.S1)	1	End clamp CLIPFIX 35-5	3022276	Phoenix Contact PAX	PXC.3022276
-7 (CAB1.S1)	1	End clamp CLIPFIX 35-5	3022276	Phoenix Contact PAX	PXC.3022276
-8 (CAB1.S1)	1	End clamp CLIPFIX 35-5	3022276	Phoenix Contact PAX	PXC.3022276
-F1 (=SYS10 - 1)	1	Circuit breaker TMC 82C 04A TMC 82C 04A	2907586	Phoenix Contact PAX	PXC.2907586
-F2 (=SYS10 - 3)	1	Circuit breaker TMC 82C 06A TMC 82C 06A	2907588	Phoenix Contact PAX	PXC.2907588
-F3 (=SYS12 - 1)	1	Electronic device circuit breaker PTCB E1 24DC/1-3A NO	2909909	Phoenix Contact PAX	PXC.2909909 Setted to 2A
-F3 (=SYS12 - 1)	1	Plug-in bridge FBS 2-6 BU	3036932	Phoenix Contact PAX	PXC.3036932 =
-F3 (=SYS12 - 1)	1	Plug-in bridge FBS 2-6	3030336	Phoenix Contact PAX	PXC.3030336 =
-F4 (=SYS12 - 4)	1	Electronic device circuit breaker PTCB E1 24DC/1-3A NO	2909909	Phoenix Contact PAX	PXC.2909909 Setted to 1A
-H1 (=SYS14 - 1)	1	Stack Light Cable Prefabricated Harness	PAL-AE01	Robotiq CNT	ROB.PAL-AE01 Left Side Pallet Stacklight
-H2 (=SYS14 - 4)	1	Stack Light Cable Prefabricated Harness	PAL-AE01	Robotiq CNT	ROB.PAL-AE01 Right Side Pallet Stacklight
-K1 (=SYS13 - 0)	1	CPU 1214C, DC/DC/DC, 14DI/10DO/2AI 6ES7214-1AG40-0XB0	6ES7214-1AG40-0XB0	Siemens FRE	SIE.6ES7214-1AG40-0XB0
-Q1 (=SYS10 - 1)	1	EM. STOP SWITCH 25A/690V 400V/9.5KW 3LD2103-0TK53	3LD2103-0TK53	Siemens FRE	SIE.3LD2103-0TK53
-S1 (=SYS15 - 1)	1	SWITCH SNAP SPST-NO 100MA 125V Limit Switch	D2HW-C273MR	Omron CNT	OMR.D2HW-C273MR Pallet Sensor 1 Left
-S2 (=SYS15 - 2)	1	SWITCH SNAP SPST-NO 100MA 125V Limit Switch	D2HW-C273MR	Omron CNT	OMR.D2HW-C273MR Pallet Sensor 2 Left

Parts list

Parts List Robotiq

Device tag Placement	Qty	Designation	Order number	Manufacturer Supplier	Part number Function text
-S3 (=SYS15 - 3)	1	SWITCH SNAP SPST-NO 100MA 125V Limit Switch	D2HW-C273MR	Omron CNT	OMR.D2HW-C273MR Pallet Sensor 3 Right
-S4 (=SYS15 - 4)	1	SWITCH SNAP SPST-NO 100MA 125V Limit Switch	D2HW-C273MR	Omron CNT	OMR.D2HW-C273MR Pallet Sensor 4 Right
-S10 (=SYS16 - 3)	1	PUSHBUTTON, WHITE 3SU1050-0AB60-0AA0	3SU1050-0AB60-0AA0	Siemens FRE	SIE.3SU1050-0AB60-0AA0 Restart Button
-S10 (=SYS16 - 3)	1	HOLDER 3SU1550-0AA10-0AA0	3SU1550-0AA10-0AA0	Siemens FRE	SIE.3SU1550-0AA10-0AA0 =
-S10 (=SYS16 - 3)	1	CONTACT MODULE 1NO 3SU1400-1AA10-1BA0	3SU1400-1AA10-1BA0	Siemens FRE	SIE.3SU1400-1AA10-1BA0 =
-S11 (=SYS16 - 4)	1	PUSHBUTTON, BLACK 3SU1050-0AB10-0AA0	3SU1050-0AB10-0AA0	Siemens FRE	SIE.3SU1050-0AB10-0AA0 Pause Button
-S11 (=SYS16 - 4)	1	HOLDER 3SU1550-0AA10-0AA0	3SU1550-0AA10-0AA0	Siemens FRE	SIE.3SU1550-0AA10-0AA0 =
-S11 (=SYS16 - 4)	1	CONTACT MODULE 1NC 3SU1400-1AA10-1CA0	3SU1400-1AA10-1CA0	Siemens FRE	SIE.3SU1400-1AA10-1CA0 =
-S12 (=SYS16 - 6)	1	ILLUMINATED PUSHBUTTON, BLUE 3SU1051-0AB50-0AA0	3SU1051-0AB50-0AA0	Siemens FRE	SIE.3SU1051-0AB50-0AA0 Confirm Pallet(s) Ready Button
-S12 (=SYS16 - 6)	1	HOLDER 3SU1550-0AA10-0AA0	3SU1550-0AA10-0AA0	Siemens FRE	SIE.3SU1550-0AA10-0AA0 =
-S12 (=SYS16 - 6)	1	CONTACT MODULE 1NO 3SU1400-1AA10-1BA0	3SU1400-1AA10-1BA0	Siemens FRE	SIE.3SU1400-1AA10-1BA0 =
-S12 (=SYS16 - 6)	1	LED MODULE, BLUE 3SU1401-1BB50-1AA0	3SU1401-1BB50-1AA0	Siemens FRE	SIE.3SU1401-1BB50-1AA0 =
-T1 (=SYS12 - 1)	1	Power supply unit TRIO-PS-2G/1AC/24DC/5	2903148	Phoenix Contact PAX	PXC.2903148
-U10 (=SYS10 - 9)	1	Compact enclosures WM WM.1244250	1244250	Rittal PAX	RIT.1244250
-U11 (=SYS10 - 9)	1	ENCLOSURE PLASTIC, 3 COMMAND POINTS 3SU1803-0AA00-0AB1	3SU1803-0AA00-0AB1	Siemens FRE	SIE.3SU1803-0AA00-0AB1
-U11 (=SYS10 - 9)	1	Cable gland G-INS-M20-S68N-PNES-BK	1411133	Phoenix Contact PAX	PXC.1411133
-U11 (=SYS10 - 9)	1	Nut A-INL-M20-P-BK	1411215	Phoenix Contact PAX	PXC.1411215
-U11 (=SYS10 - 9)	1	Start button symbol Sticker	PAL-AE059	Robotiq ROB	ROB.PAL-AE059

Parts list

Parts List Robotiq

Device tag Placement	Qty	Designation	Order number	Manufacturer Supplier	Part number Function text
-U11 (=SYS10 - 9)	1	Stop button symbol Sticker	PAL-AE060	Robotiq ROB	ROB.PAL-AE060
-U11 (=SYS10 - 9)	1	Pallet button symbol Sticker	PAL-AE061	Robotiq ROB	ROB.PAL-AE061
-U15 (=SYS10 - 9)	1	Outlet filter SK.3237200	3237200	Rittal PAX	RIT.3237200
-U15 (=SYS10 - 9)	1	KEL-ER 16|8 / Cable entry frame, split, double row, IP65 KEL-ER 16|8	48168	Icotek IAC	ICO.48168
-U15 (=SYS10 - 9)	16	Resistant Rivet Nuts M6x1.0 Interior Thread, .7-4.2mm Steel Twist-Resistant Rivet Nuts	95105A183	Mc Master MCM	MCM.95105A183
-U15 (=SYS10 - 9)	1	Cam lock SZ.2420000	2420000	Rittal PAX	RIT.2420000
-W50 (=SYS13 - 3)	1	Sensor/actuator cable SAC-4P- 1,5-PUR/M12FS	1668108	Phoenix Contact PAX	PXC.1668108
-W51 (=SYS15 - 1)	1	Pallet Sensor Cable (M12 4P) Prefabricated Harness	PAL-AE02	Robotiq CNT	ROB.PAL-AE02
-W52 (=SYS15 - 1)	1	Pallet Sensor Cable (Sensor) Prefabricated Harness	PAL-AE03	Robotiq CNT	ROB.PAL-AE03
-W53 (=SYS15 - 2)	1	Pallet Sensor Cable (Sensor) Prefabricated Harness	PAL-AE03	Robotiq CNT	ROB.PAL-AE03
-W60 (=SYS13 - 3)	1	Sensor/actuator cable SAC-4P- 1,5-PUR/M12FS	1668108	Phoenix Contact PAX	PXC.1668108
-W61 (=SYS15 - 3)	1	Pallet Sensor Cable (M12 4P) Prefabricated Harness	PAL-AE02	Robotiq CNT	ROB.PAL-AE02
-W62 (=SYS15 - 3)	1	Pallet Sensor Cable (Sensor) Prefabricated Harness	PAL-AE03	Robotiq CNT	ROB.PAL-AE03
-W63 (=SYS15 - 4)	1	Pallet Sensor Cable (Sensor) Prefabricated Harness	PAL-AE03	Robotiq CNT	ROB.PAL-AE03
-W70 (=SYS14 - 2)	1	Sensor/actuator cable SAC-5P-10,0-PUR/M12FS	1683374	Phoenix Contact PAX	PXC.1683374
-W80 (=SYS14 - 4)	1	Sensor/actuator cable SAC-5P-10,0-PUR/M12FS	1683374	Phoenix Contact PAX	PXC.1683374
-W100 (=SYS14 - 8)	1	Ethernet cable Cat5e 6ft 350Mhz RJ45 ETH Cables Cat6 10ft	AT-C5-6WH	Prime Cables PRC	PRC.AT-C5-6WH
-W101 (=SYS16 - 3)	1	Sensor/actuator cable SAC-8P-M12MS/ 5,0-PUR	1522516	Phoenix Contact PAX	PXC.1522516

Parts list

Parts List Robotiq

Device tag Placement	Qty	Designation	Order number	Manufacturer Supplier	Part number Function text
-W103 (=SYS16 - 3)	1	ÖLFLEX 190 5G18AWG ÖLFLEX® 190	601805	LAPP LAPP	LAPP.601805
-X1 (=SYS10 - 1);(=SYS10 - 3)	2	Double-level terminal block PTTBS 2,5	3209604	Phoenix Contact PAX	PXC.3209604
-X1 (=SYS10 - 1)	1	End clamp CLIPFIX 35-5	3022276	Phoenix Contact PAX	PXC.3022276
-X1 (=SYS10 - 3)	1	End cover D-STTBS 2,5	3038503	Phoenix Contact PAX	PXC.3038503
-X25 (=SYS13 - 1);(=SYS13 - 3);(=SYS13 - 4);(=SYS14 - 0)	6	Double-level terminal block PTTBS 2,5	3209604	Phoenix Contact PAX	PXC.3209604
-X25 (=SYS13 - 1)	1	End clamp CLIPFIX 35-5	3022276	Phoenix Contact PAX	PXC.3022276
-X25 (=SYS14 - 0)	1	End cover D-STTBS 2,5	3038503	Phoenix Contact PAX	PXC.3038503
-X26;=SYS+CAB1-X26 (=SYS14 - 1);(=SYS14 - 2);(=SYS14 - 3);(=SYS14 - 4);(=SYS14 - 5);(=SYS14 - 6);(=SYS14 - 7)	14	Double-level terminal block PTTBS 2,5	3209604	Phoenix Contact PAX	PXC.3209604
-X26 (=SYS14 - 1)	1	End clamp CLIPFIX 35-5	3022276	Phoenix Contact PAX	PXC.3022276
=SYS+CAB1-X26	1	End cover D-STTBS 2,5	3038503	Phoenix Contact PAX	PXC.3038503
-X50 (=SYS16 - 6);(=SYS16 - 8);(=SYS16 - 9)	3	Double-level terminal block PTTBS 2,5	3209604	Phoenix Contact PAX	PXC.3209604
-X50 (=SYS16 - 6)	1	End clamp CLIPFIX 35-5	3022276	Phoenix Contact PAX	PXC.3022276
-X50 (=SYS16 - 9)	1	End cover D-STTBS 2,5	3038503	Phoenix Contact PAX	PXC.3038503
-X51;=SYS+CAB1-X51 (=SYS16 - 3);(=SYS16 - 4);(=SYS16 - 7)	4	Double-level terminal block PTTBS 2,5	3209604	Phoenix Contact PAX	PXC.3209604
-X51 (=SYS16 - 3)	1	End clamp CLIPFIX 35-5	3022276	Phoenix Contact PAX	PXC.3022276
=SYS+CAB1-X51	1	End cover D-STTBS 2,5	3038503	Phoenix Contact PAX	PXC.3038503
-X100 (CAB1.S1)	1	IEC Appliance Inlet C20 Power Entry Connector Receptacle	4798.9200	Schurter Inc DGY	SCH.4798.9200
-X101 (=SYS10 - 1)	1	Stripped cordset 16A 3.0m, V-Lock VAC19KS	6051.2109	Schurter Inc DGY	SCH.6051.2109 UR Controller Supply

Parts list

Parts List Robotiq

Device tag Placement	Qty	Designation	Order number	Manufacturer Supplier	Part number Function text
-X110 (=SYS16 - 3)	1	Flush-type connector SACC-DSI-M12FS-8CON-M16/0,5	1419690	Phoenix Contact PAX	PXC.1419690
-XE (=SYS10 - 1);(=SYS13 - 1)	2	Ground modular terminal block PT 2,5-QUATTRO-PE	3209594	Phoenix Contact PAX	PXC.3209594
-XE (=SYS10 - 1)	1	End clamp CLIPFIX 35-5	3022276	Phoenix Contact PAX	PXC.3022276
-XE (=SYS13 - 1)	1	End cover D-ST 2,5-QUATTRO	3030514	Phoenix Contact PAX	PXC.3030514

Summarized parts list

Manufacturer	Order number	Designation	Type number	Quantity	DT
Omron	D2HW-C273MR	SWITCH SNAP SPST-NO 100MA 125V	Limit Switch	4	-S1...-S4
Robotiq	PAL-AE01	Stack Light Cable	Prefabricated Harness	2	-H1;-H2
Robotiq	PAL-AE02	Pallet Sensor Cable (M12 4P)	Prefabricated Harness	2	-W51;-W61
Robotiq	PAL-AE03	Pallet Sensor Cable (Sensor)	Prefabricated Harness	4	-W52;-W53;-W62;-W63
Schurter Inc	6051.2109	Stripped cordset 16A 3.0m, V-Lock	VAC19KS	1	-X101
Siemens	6ES7214-1AG40-0XB0	CPU 1214C, DC/DC/DC, 14DI/10DO/2AI	6ES7214-1AG40-0XB0	1	-K1
Siemens	3LD2103-0TK53	EM. STOP SWITCH 25A/690V 400V/9.5KW	3LD2103-0TK53	1	-Q1
Siemens	3SU1050-0AB60-0AA0	PUSHBUTTON, WHITE	3SU1050-0AB60-0AA0	1	-S10
Siemens	3SU1550-0AA10-0AA0	HOLDER	3SU1550-0AA10-0AA0	3	-S10...-S12
Siemens	3SU1400-1AA10-1BA0	CONTACT MODULE 1NO	3SU1400-1AA10-1BA0	2	-S10;-S12
Siemens	3SU1050-0AB10-0AA0	PUSHBUTTON, BLACK	3SU1050-0AB10-0AA0	1	-S11
Siemens	3SU1400-1AA10-1CA0	CONTACT MODULE 1NC	3SU1400-1AA10-1CA0	1	-S11
Siemens	3SU1051-0AB50-0AA0	ILLUMINATED PUSHBUTTON, BLUE	3SU1051-0AB50-0AA0	1	-S12
Siemens	3SU1401-1BB50-1AA0	LED MODULE, BLUE	3SU1401-1BB50-1AA0	1	-S12
Siemens	3SU1803-0AA00-0AB1	ENCLOSURE PLASTIC, 3 COMMAND POINTS	3SU1803-0AA00-0AB1	1	-U11
Icotek	48168	KEL-ER 16|8 / Cable entry frame, split, double row, IP65	KEL-ER 16|8	1	-U15
LAPP	601805	ÖLFLEX 190 5G18AWG	ÖLFLEX® 190	2,00	-W103
Mc Master	95105A183	Resistant Rivet Nuts M6x1.0 Interior Thread, .7-4.2mm	Steel Twist-Resistant Rivet Nuts	16	-U15
Phoenix Contact	2907586	Circuit breaker TMC 82C 04A	TMC 82C 04A	1	-F1
Phoenix Contact	2907588	Circuit breaker TMC 82C 06A	TMC 82C 06A	1	-F2
Phoenix Contact	2909909	Electronic device circuit breaker	PTCB E1 24DC/1-3A NO	2	-F3;-F4

Summarized parts list

Manufacturer	Order number	Designation	Type number	Quantity	DT
Phoenix Contact	3036932	Plug-in bridge	FBS 2-6 BU	1	-F3
Phoenix Contact	3030336	Plug-in bridge	FBS 2-6	1	-F3
Phoenix Contact	2903148	Power supply unit	TRIO-PS-2G/1AC/24DC/5	1	-T1
Phoenix Contact	1668108	Sensor/actuator cable	SAC-4P- 1,5-PUR/M12FS	2	-W50;-W60
Phoenix Contact	1683374	Sensor/actuator cable	SAC-5P-10,0-PUR/M12FS	2	-W70;-W80
Phoenix Contact	1522516	Sensor/actuator cable	SAC-8P-M12MS/ 5,0-PUR	1	-W101
Phoenix Contact	3209604	Double-level terminal block	PTTBS 2,5	29	-X1;-X25;-X26;-X50;-X51;=SYS+CAB1-X26;=SYS+CAB1-X51
Phoenix Contact	3022276	End clamp	CLIPFIX 35-5	6	-X1;-X25;-X26;-X50;-X51;-XE
Phoenix Contact	3038503	End cover	D-STTBS 2,5	5	-X1;-X25;-X50;=SYS+CAB1-X26;=SYS+CAB1-X51
Phoenix Contact	1419690	Flush-type connector	SACC-DSI-M12FS-8CON-M16/0,5	1	-X110
Phoenix Contact	3209594	Ground modular terminal block	PT 2,5-QUATTRO-PE	2	-XE
Phoenix Contact	3030514	End cover	D-ST 2,5-QUATTRO	1	-XE
Phoenix Contact	1411133	Cable gland	G-INS-M20-S68N-PNES-BK	1	-U11
Phoenix Contact	1411215	Nut	A-INL-M20-P-BK	1	-U11
Rittal	1244250	Compact enclosures WM	WM.1244250	1	-U10
Rittal	3237200	Outlet filter	SK.3237200	1	-U15
Rittal	2420000	Cam lock	SZ.2420000	1	-U15
Prime Cables	AT-C5-6WH	Ethernet cable Cat5e 6ft 350Mhz RJ45	ETH Cables Cat6 10ft	1	-W100
Robotiq	PAL-AE059	Start button symbol	Sticker	1	-U11
Robotiq	PAL-AE060	Stop button symbol	Sticker	1	-U11
Robotiq	PAL-AE061	Pallet button symbol	Sticker	1	-U11

Terminal diagram

Terminals Diagram Robotiq

Strip

=SYS+CAB1-X1

Function text	Cable name	Cable type	Target designation	Connection point	Terminal	Level	Jumper	Target designation	Connection point	Cable name	Cable type	Page / column
			-F1		1	2		-Q1	2			(10 - 1)
			-F1		1	1		-Q1	4			(10 - 1)
			-F2		2	2						(10 - 3)
			-F2		2	1						(10 - 3)

Rev C	2021-11-30	Michael Goidin	Date	2021-12-15
Rev B	2021-10-27	Michael Goidin	Created by	Michael Goidin
Rev A	2021-10-27	Michael Goidin	Approved by	
Modification	Date	Name	Revision	Rev C

Palletizing

ROBOTIQ

Terminal diagram =SYS+CAB1-X1

PAL-AE05

Folio 200

Page 28 / 37

Terminal diagram

Function text							-W60	-W50	Cable name	Strip =SYS+CAB1-X25							Cable name	-W70	-W80			Page / column
							SAC-4P- 1,5-PUR/M12FS	SAC-4P- 1,5-PUR/M12FS	Cable type	Target designation	Connection point	Terminal	Level	Jumper	Target designation	Connection point	Cable type	SAC-5P-10,0-PUR/M12FS	SAC-5P-10,0-PUR/M12FS			
											-X10:1	1	2			2.1						(13 - 1)
											-X10:2	1	1			-'						(13 - 1)
								BN		-W50	1	2	2									(13 - 3)
											-X10:6	2	1									(13 - 2)
								BU		-W50	3	3	2									(13 - 3)
											-X11:1	3	1									(13 - 8)
							BN			-W60	1	4	2									(13 - 4)
												4	1			-X12:2						(14 - 1)
							BU			-W60	3	5	2									(13 - 4)
												5	1		-W70	5		GNYE				(14 - 2)
												6	2			-X12:1						(14 - 0)
												6	1		-W70	5			GNYE			(14 - 4)

Rev C	2021-11-30	Michael Goidin	Date	2021-12-15
Rev B	2021-10-27	Michael Goidin	Created by	Michael Goidin
Rev A	2021-10-27	Michael Goidin	Approved by	
Modification	Date	Name	Revision	Rev C

Palletizing

ROBOTIQ

Terminal diagram =SYS+CAB1-X25

PAL-AE05

Folio 202

Page 29 / 37

Terminal diagram

Terminals Diagram Robotiq

Function text							-W80	-W70	Cable name	Strip =SYS+CAB1-X26							Cable name	-W50	-W60			Page / column
							SAC-5P-10,0-PUR/M12FS	SAC-5P-10,0-PUR/M12FS	Cable type	Target designation	Connection point	Terminal	Level	Jumper	Target designation	Connection point	Cable type	SAC-4P- 1,5-PUR/M12FS	SAC-4P- 1,5-PUR/M12FS			
								BN		-W70	1	1	2			-X12:3						(14 - 1)
											-X10:7	1	1		-W50	2		WH				(13 - 3)
								WH		-W70	2	2	2			-X12:4						(14 - 2)
											-X10:8	2	1		-W50	4		BK				(13 - 3)
								BU		-W70	3	3	2			-X12:5						(14 - 3)
											-X10:9	3	1		-W60	2			WH			(13 - 4)
								BK		-W70	4	4	2			-X12:6						(14 - 3)
											-X10:10	4	1		-W60	4			BK			(13 - 4)
							BN			-W80	1	5	2			-X12:7						(14 - 4)
											-X10:11	5	1		-X51	3:4						(13 - 4)
							WH			-W80	2	6	2			-X12:8						(14 - 5)
											-X10:12	6	1									(13 - 5)
							BU			-W80	3	7	2			-X12:9						(14 - 5)
											-X10:13	7	1									(13 - 5)
							BK			-W80	4	8	2			-X12:10						(14 - 6)
											-X10:14	8	1									(13 - 5)
										-X51	3:2	9	2			-X12:11						(14 - 7)
											-X10:15	9	1									(13 - 6)
												10	2			-X12:12						(14 - 7)
											-X10:16	10	1									(13 - 6)
												11	2									
											-X10:17	11	1									(13 - 7)
												12	2									
											-X10:18	12	1									(13 - 7)
												13	2									
											-X10:19	13	1									(13 - 7)
												14	2									
											-X10:20	14	1									(13 - 8)

Terminal diagram

Terminals Diagram Robotiq

Function text									Cable name	Strip =SYS+CAB1-X50							Cable name					Page / column
									Cable type	Target designation	Connection point	Terminal	Level	Jumper	Target designation	Connection point	Cable type					
											5	1	2			2.1						(16 - 6)
											3.1	1	1			8						(16 - 7)
												2	2									(16 - 8)
												2	1									(16 - 8)
												3	2									(16 - 9)
												3	1									(16 - 9)

Terminal diagram

Terminals Diagram Robotiq

Function text									Cable name	Strip =SYS+CAB1-XE						Cable name					Page / column
									Cable type	Target designation	Connection point	Terminal	Level	Jumper	Target designation	Connection point	Cable type					
												1	0	•		PE						(10 - 1)
												2	0	•		-X10:3						(13 - 1)

Cables Diagram Robotiq

Cable name -W1
Cable type
Free conductors 0

Cable parts
Order number

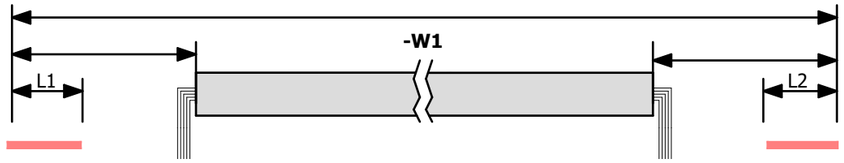

Mounting location:	Source	Function text source	Stopper	L1 [mm]	Part number
Cabinet 1	-W1:L				

Part number	L2 [mm]	Stopper	Function text target	Target	Mounting location:
				-W1:N	Cabinet 1

Cable name -W2
Cable type
Free conductors 0

Cable parts
Order number

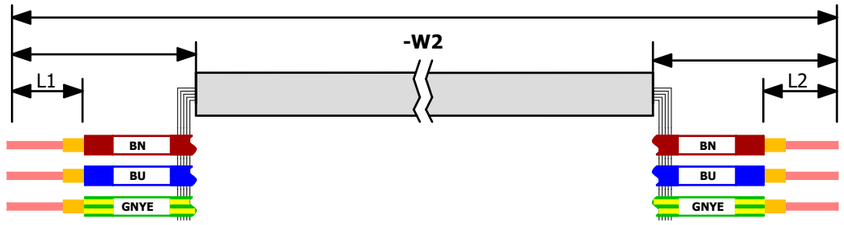

Mounting location:	Source	Function text source	Stopper	L1 [mm]	Part number
Cabinet 1	-F1				
Cabinet 1	-F1				
Cabinet 1	-XE:1:1				

Part number	L2 [mm]	Stopper	Function text target	Target	Mounting location:
				-X101:2	Cabinet 1
				-X101:1	Cabinet 1
				-X101:PE	Cabinet 1

Cable name -W50
Cable type SAC-4P- 1,5-PUR/M12FS
Free conductors 0

Cable parts PXC.1668108
Order number 1668108

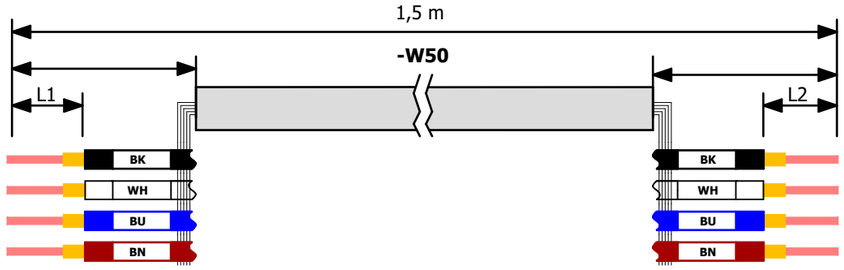

Mounting location:	Source	Function text source	Stopper	L1 [mm]	Part number
Cabinet 1	-X26:2:1				
Cabinet 1	-X26:1:1				
Cabinet 1	-X25:3:3				
Cabinet 1	-X25:2:3				

Part number	L2 [mm]	Stopper	Function text target	Target	Mounting location:
				-W50:4	Cabinet 1
				-W50:2	Cabinet 1
				-W50:3	Cabinet 1
				-W50:1	Cabinet 1

Cable name -W51
Cable type Prefabricated Harness
Free conductors 0

Cable parts ROB.PAL-AE02
Order number PAL-AE02

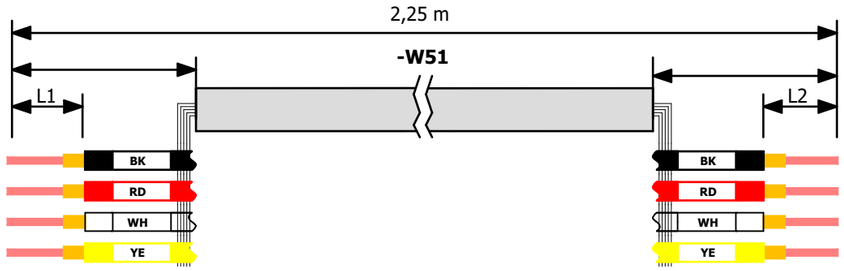

Mounting location:	Source	Function text source	Stopper	L1 [mm]	Part number
	-W51B:2				
	-W51A:1				
	-W51A:2				
	-W51B:1				

Part number	L2 [mm]	Stopper	Function text target	Target	Mounting location:
				-W51:4	
				-W51:1	
				-W51:2	
				-W51:3	

Rev C	2021-11-30	Michael Goidin	Date	2021-12-15
Rev B	2021-10-27	Michael Goidin	Created by	Michael Goidin
Rev A	2021-10-27	Michael Goidin	Approved by	
Modification	Date	Name	Revision	Rev C

Palletizing

ROBOTIQ

Cable diagram:W1 :W2 :W50 :W51

PAL-AE05

Folio 300

Page 33 / 37

Cables Diagram Robotiq

Cable name -W52
Cable type Prefabricated Harness
Free conductors 0

Cable parts ROB.PAL-AE03
Order number PAL-AE03

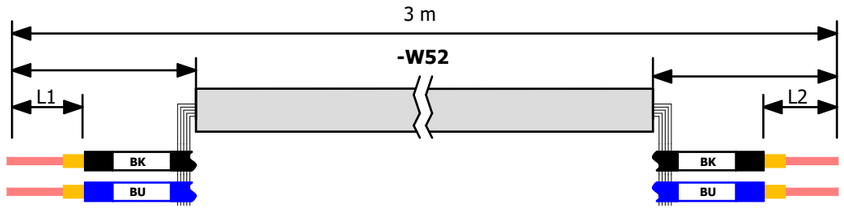

Mounting location:	Source	Function text source	Stopper	L1 [mm]	Part number
	-W52:1				
	-W52:2				

Part number	L2 [mm]	Stopper	Function text target	Target	Mounting location:
				-S1:13	
				-S1:14	

Cable name -W53
Cable type Prefabricated Harness
Free conductors 0

Cable parts ROB.PAL-AE03
Order number PAL-AE03

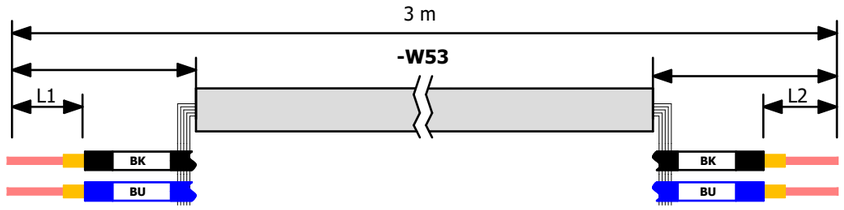

Mounting location:	Source	Function text source	Stopper	L1 [mm]	Part number
	-W53:1				
	-W53:2				

Part number	L2 [mm]	Stopper	Function text target	Target	Mounting location:
				-S2:13	
				-S2:14	

Cable name -W60
Cable type SAC-4P- 1,5-PUR/M12FS
Free conductors 0

Cable parts PXC.1668108
Order number 1668108

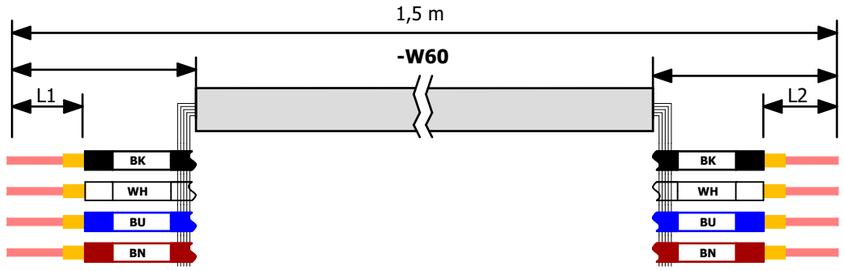

Mounting location:	Source	Function text source	Stopper	L1 [mm]	Part number
Cabinet 1	-X26:4:1				
Cabinet 1	-X26:3:1				
Cabinet 1	-X25:5:3				
Cabinet 1	-X25:4:3				

Part number	L2 [mm]	Stopper	Function text target	Target	Mounting location:
				-W60:4	*Cabinet 1*
				-W60:2	*Cabinet 1*
				-W60:3	*Cabinet 1*
				-W60:1	*Cabinet 1*

Cable name -W61
Cable type Prefabricated Harness
Free conductors 0

Cable parts ROB.PAL-AE02
Order number PAL-AE02

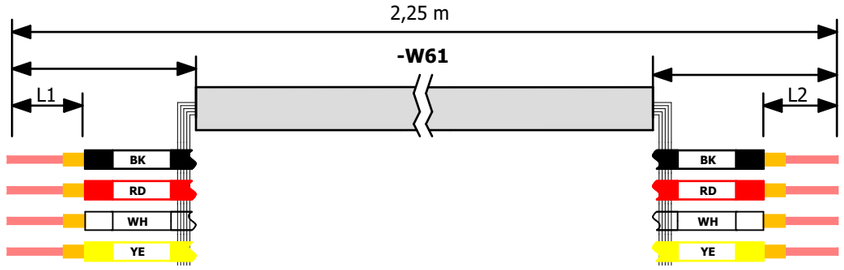

Mounting location:	Source	Function text source	Stopper	L1 [mm]	Part number
	-W61B:2				
	-W61A:1				
	-W61A:2				
	-W61B:1				

Part number	L2 [mm]	Stopper	Function text target	Target	Mounting location:
				-W61:4	
				-W61:1	
				-W61:2	
				-W61:3	

Rev C	2021-11-30	Michael Goidin	Date	2021-12-15
Rev B	2021-10-27	Michael Goidin	Created by	Michael Goidin
Rev A	2021-10-27	Michael Goidin	Approved by	
Modification	Date	Name	Revision	Rev C

Palletizing

ROBOTIQ

Cable diagram:W52 :W53 :W60 :W61

PAL-AE05

Folio 301

Page 34 / 37

Cables Diagram Robotiq

Cable name -W62
Cable type Prefabricated Harness
Free conductors 0

Cable parts ROB.PAL-AE03
Order number PAL-AE03

Mounting location:	Source	Function text source	Stopper	L1 [mm]	Part number
	-W62:1				
	-W52:2				

Part number	L2 [mm]	Stopper	Function text target	Target	Mounting location:
				-S3:13	
				-S3:14	

Cable name -W63
Cable type Prefabricated Harness
Free conductors 0

Cable parts ROB.PAL-AE03
Order number PAL-AE03

Mounting location:	Source	Function text source	Stopper	L1 [mm]	Part number
	-W63:1				
	-W53:2				

Part number	L2 [mm]	Stopper	Function text target	Target	Mounting location:
				-S4:13	
				-S4:14	

Cable name -W70
Cable type SAC-5P-10,0-PUR/M12FS
Free conductors 1

Cable parts PXC.1683374
Order number 1683374

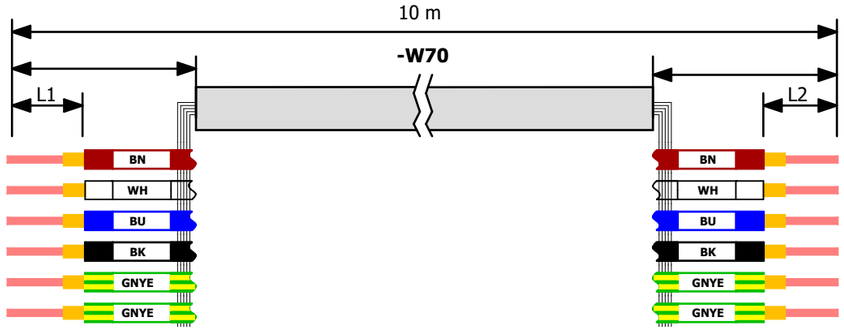

Mounting location:	Source	Function text source	Stopper	L1 [mm]	Part number
Cabinet 1	-W70:1				
Cabinet 1	-W70:2				
Cabinet 1	-W70:3				
Cabinet 1	-W70:4				
Cabinet 1	-W70:5				

Part number	L2 [mm]	Stopper	Function text target	Target	Mounting location:
				-X26:1:3	Cabinet 1
				-X26:2:3	Cabinet 1
				-X26:3:3	Cabinet 1
				-X26:4:3	Cabinet 1
				-X25:5:1	Cabinet 1

Cable name -W80
Cable type SAC-5P-10,0-PUR/M12FS
Free conductors 1

Cable parts PXC.1683374
Order number 1683374

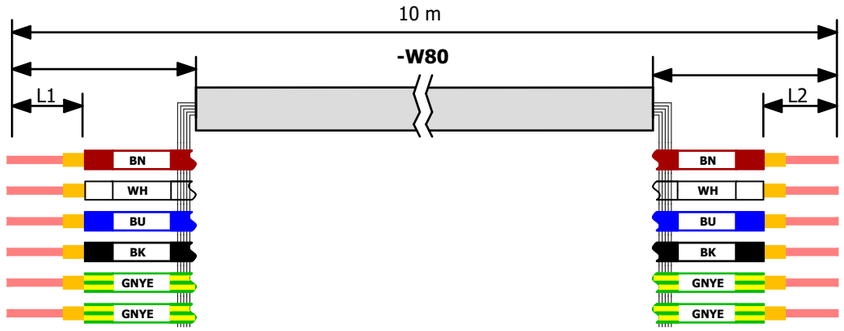

Mounting location:	Source	Function text source	Stopper	L1 [mm]	Part number
Cabinet 1	-W80:1				
Cabinet 1	-W80:2				
Cabinet 1	-W80:3				
Cabinet 1	-W80:4				
Cabinet 1	-W70:5				

Part number	L2 [mm]	Stopper	Function text target	Target	Mounting location:
				-X26:5:3	Cabinet 1
				-X26:6:3	Cabinet 1
				-X26:7:3	Cabinet 1
				-X26:8:3	Cabinet 1
				-X25:6:1	Cabinet 1

Rev C	2021-11-30	Michael Goidin	Date	2021-12-15
Rev B	2021-10-27	Michael Goidin	Created by	Michael Goidin
Rev A	2021-10-27	Michael Goidin	Approved by	
Modification	Date	Name	Revision	Rev C

Palletizing

ROBOTIQ

Cable diagram:W62 :W63 :W70 :W80

PAL-AE05

Folio 302

Page 35 / 37

Cables Diagram Robotiq

Cable name -W100
Cable type ETH Cables Cat6 10ft
Free conductors 0

Cable parts PRC.AT-C5-6WH
Order number AT-C5-6WH

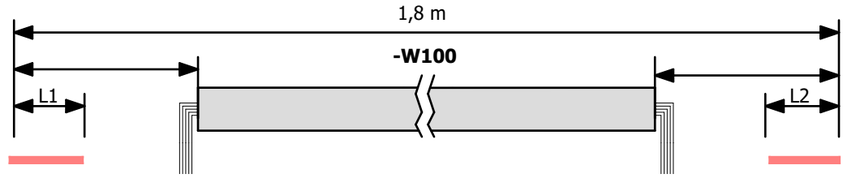

Mounting location:	Source	Function text source	Stopper	L1 [mm]	Part number
Cabinet 1	-W100:1				

Part number	L2 [mm]	Stopper	Function text target	Target	Mounting location:
				-K1:X1P1 R	*Cabinet 1*

Cable name -W101
Cable type SAC-8P-M12MS/ 5,0-PUR
Free conductors 0

Cable parts PXC.1522516
Order number 1522516

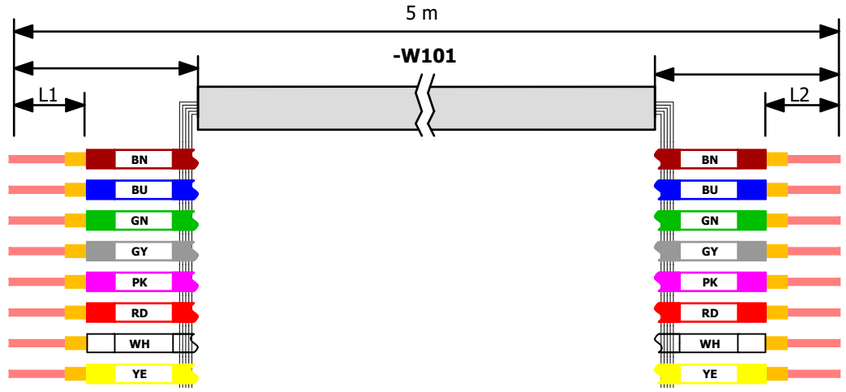

Mounting location:	Source	Function text source	Stopper	L1 [mm]	Part number
	+Box-W101:2				
	+Box-W101:7				
	+Box-W101:3				
	+Box-W101:5				
	+Box-W101:6				
	+Box-W101:8				
	+Box-W101:1				
	+Box-W101:4				

Part number	L2 [mm]	Stopper	Function text target	Target	Mounting location:
				+Box-S10:4	
				+Box-S12:X1	
				+Box-S11:1	
				+Box-S12:3	
				+Box-S12:4	
				+Box-S12:X2	
				+Box-S10:3	
				+Box-S11:2	

Cable name -W103
Cable type ÖLFLEX® 190
Free conductors 1

Cable parts LAPP.601805
Order number 601805

Mounting location:	Source	Function text source	Stopper	L1 [mm]	Part number
Cabinet 1	-X51:1:2				
Cabinet 1	-X51:1:4				
Cabinet 1	-X51:2:2				
Cabinet 1	-X51:2:4				

Part number	L2 [mm]	Stopper	Function text target	Target	Mounting location:
				+UR_Controller-24V:2	
				+UR_Controller-CI0:1	
				+UR_Controller-24V:1	
				+UR_Controller-SI0:1	

Rev C	2021-11-30	Michael Goidin	Date	2021-12-15
Rev B	2021-10-27	Michael Goidin	Created by	Michael Goidin
Rev A	2021-10-27	Michael Goidin	Approved by	
Modification	Date	Name	Revision	Rev C

Palletizing

ROBOTIQ

Cable diagram:W100 :W101 :W103

PAL-AE05

Folio 303

Page 36 / 37

Wires list

Connections List Robotiq

Connection	Target 1	Target 2	Color	Cross-section
1	=SYS-Q1:1	=SYS-X100:L	BK	2,5
2	=SYS-Q1:2	=SYS-X1:1:2	BK	2,5
3	=SYS-F1	=SYS-X1:1:3	BK	2,5
4	=SYS-Q1:3	=SYS-X100:N	RD	2,5
5	=SYS-Q1:4	=SYS-X1:1:1	RD	2,5
6	=SYS-F1	=SYS-X1:1:4	RD	2,5
7	=SYS-F2	=SYS-X1:2:3	BK	2,5
8	=SYS-F2	=SYS-T1:L/+	BK	2,5
9	=SYS-F2	=SYS-X1:2:4	RD	2,5
10	=SYS-F2	=SYS-T1:N/-	RD	2,5
11	=SYS-F3:1.1	=SYS-T1:+	BU	0,75
12	=SYS-F3:3.1	=SYS-T1:-	BU/WH	0,75
13	=SYS-F3:2.1	=SYS-X25:1:2	BU	0,75
16	=SYS-T1:-'	=SYS-X25:1:1	BU/WH	0,75
17	=SYS-F4:3.1	=SYS-X50:1:4	BU/WH	0,75
18	=SYS-F4:2.1	=SYS-X50:1:2	BU	0,75
20	=SYS-K1:-X10:1	=SYS-X25:1:3	BU	0,75
21	=SYS-K1:-X10:2	=SYS-X25:1:4	BU/WH	0,75
22	=SYS-K1:-X10:6	=SYS-X25:2:4	BU/WH	0,75
23	=SYS-K1:-X10:7	=SYS-X26:1:4	BU	0,75
24	=SYS-K1:-X10:8	=SYS-X26:2:4	BU	0,75
25	=SYS-K1:-X10:9	=SYS-X26:3:4	BU	0,75
26	=SYS-K1:-X10:10	=SYS-X26:4:4	BU	0,75
27	=SYS-X26:5:1	=SYS-X51:3:4	BU	0,75
28	=SYS-K1:-X10:11	=SYS-X26:5:4	BU	0,75
29	=SYS-K1:-X10:12	=SYS-X26:6:4	BU	0,75
30	=SYS-K1:-X10:13	=SYS-X26:7:4	BU	0,75
31	=SYS-K1:-X10:14	=SYS-X26:8:4	BU	0,75
32	=SYS-K1:-X10:15	=SYS-X26:9:4	BU	0,75
33	=SYS-K1:-X10:16	=SYS-X26:10:4	BU	0,75
34	=SYS-K1:-X10:17	=SYS-X26:11:4	BU	0,75
35	=SYS-K1:-X10:18	=SYS-X26:12:4	BU	0,75
36	=SYS-K1:-X10:19	=SYS-X26:13:4	BU	0,75
37	=SYS-K1:-X10:20	=SYS-X26:14:4	BU	0,75
38	=SYS-K1:-X11:1	=SYS-X25:3:4	BU/WH	0,75
39	=SYS-K1:-X12:1	=SYS-X25:6:2	BU	0,75
40	=SYS-K1:-X12:2	=SYS-X25:4:1	BU/WH	0,75
41	=SYS-K1:-X12:3	=SYS-X26:1:2	BU	0,75
42	=SYS-K1:-X12:4	=SYS-X26:2:2	BU	0,75
43	=SYS-K1:-X12:5	=SYS-X26:3:2	BU	0,75
44	=SYS-K1:-X12:6	=SYS-X26:4:2	BU	0,75
45	=SYS-K1:-X12:7	=SYS-X26:5:2	BU	0,75
46	=SYS-K1:-X12:8	=SYS-X26:6:2	BU	0,75
47	=SYS-K1:-X12:9	=SYS-X26:7:2	BU	0,75
48	=SYS-K1:-X12:10	=SYS-X26:8:2	BU	0,75
49	=SYS-K1:-X12:11	=SYS-X26:9:2	BU	0,75
50	=SYS-X26:9:3	=SYS-X51:3:2	BU	0,75
51	=SYS-K1:-X12:12	=SYS-X26:10:2	BU	0,75

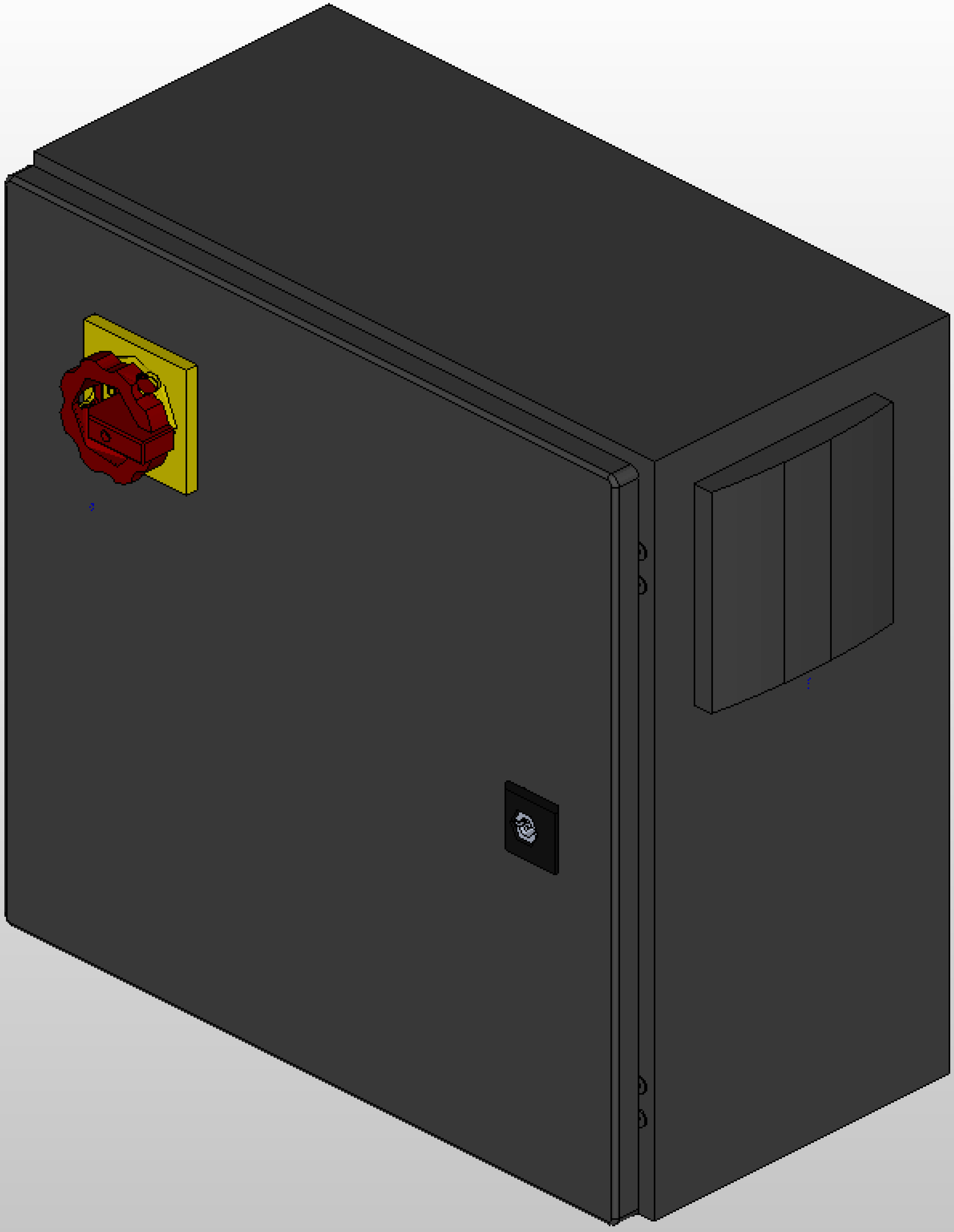

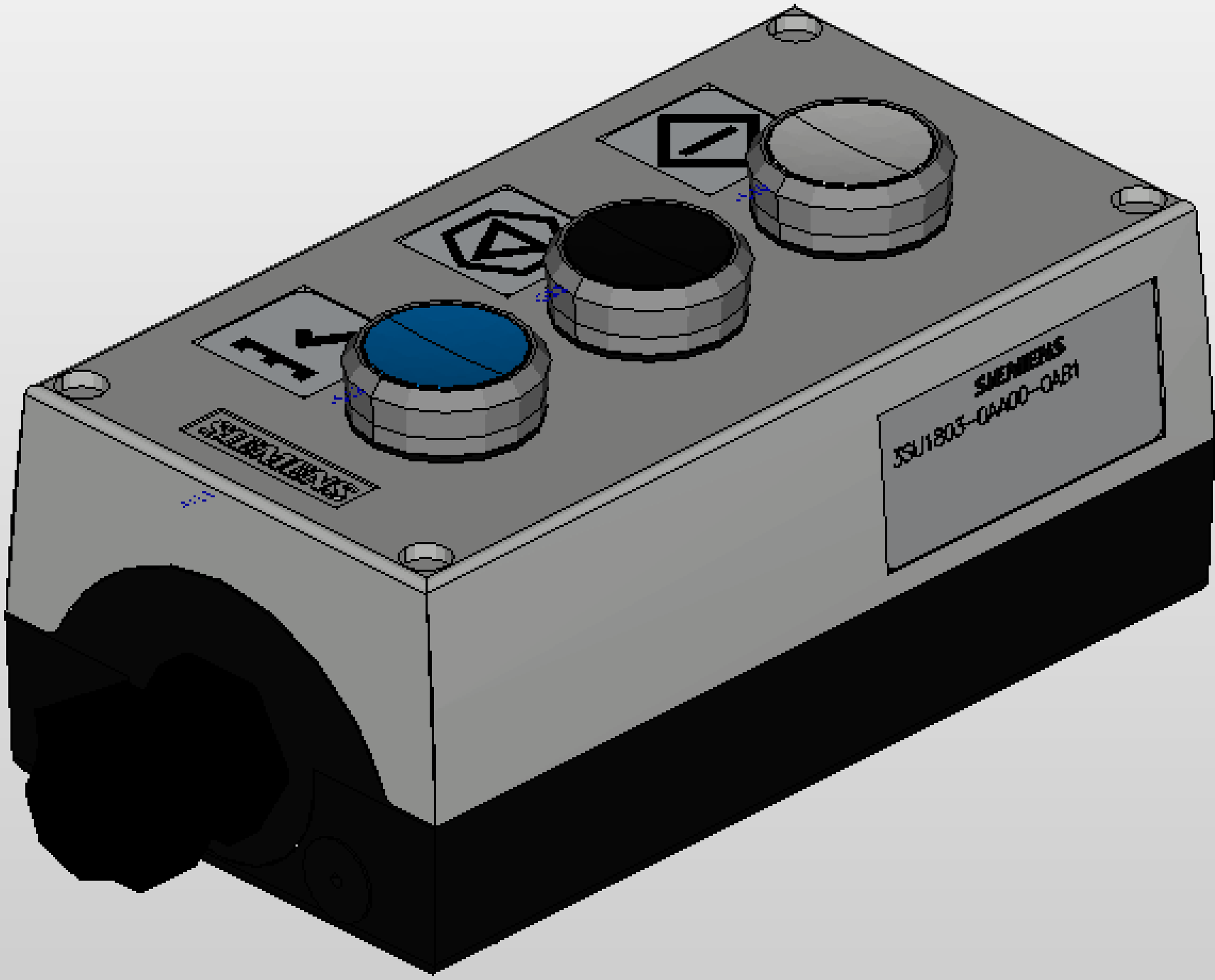
SIEMENS
3SU1803-0AA00-0AB1