ROBOTIQ

HAND-E

Original Notice

© 2019 Robotic Inc.

Robotiq Hand-E
for CB-Series Universal Robots

Instruction Manual

LEAN ROBOTICS

robotiq.com | leanrobotics.org

Revisions 7
1. General Presentation 9
1.1. Gripper nomenclature 10
1.2. Object picking 12
1.3. Setup and control 13
2. Safety 14
2.1. Warning 14
2.2. Intended Use 15
3. Installation 16
3.1. Scope of Delivery 17
3.1.1. Robotiq Hand-E Gripper UR Kit 17
3.2. Required Tools and Equipment 18
3.3. Environmental and Operating Conditions 19
3.4. Mechanical Installation 20
3.4.1. Installing the fingers/fingertips/holders on the Gripper 20
3.4.2. Installing the Gripper onto the robot 22
Single Gripper 22
Multiple Grippers 23
3.5. Electrical Setup 24
3.5.1. Pinout Interface 24
3.5.2. Coupling to controller 24
Single Gripper 27
Multiple Grippers 27
3.6. Testing the Gripper with the Robotiq User Interface (RUI) 28
3.7. Installation for Universal Robots 30
3.8. URCap Package 31
3.8.1. Installing URCap Package 32
Single Gripper 32
Multiple Grippers 33
3.8.2. Uninstalling URCap Package 36
3.8.3. License Agreement 37

4. Control 40
4.1. Overview 40
4.2. Gripper Register Mapping 42
4.3. Robot Output Registers & Functionalities 43
4.4. Robot Input Registers & Status 46
4.5. Picking Features 49
4.5.1. Force control 49
4.5.2. Re-Grasp 50
4.5.3. Object detection 51
4.5.4. Brake engagement 51
4.6. Control Logic Example 52
4.7. Modbus RTU Communication 53
4.7.1. Connection Setup 54
4.7.2. Read holding registers (FC03) 55
4.7.3. Read input registers (FC04) 56
4.7.4. Preset multiple registers (FC16) 57
4.7.5. Master read & write multiple registers FC23 58
4.7.6. Modbus RTU example 60
4.8. Control over Universal Robots with URCaps 70
4.8.1. Gripper Dashboard 71
Overview 71
Single Gripper 71
Multiple Grippers 73
Features 73
4.8.2. Gripper Calibration menu and wizard 74
Features 76
4.8.3. Gripper Toolbar 78
Overview 78
Single Gripper 79
Multiple Grippers 80
Features 81
Gripper activation 81
Gripper operation window 82
Show/hide Gripper Toolbar 83

4.8.4. Gripper Node 83
Command window 84
Features 86
Edit action screen 88
Single Gripper 88
Multiple Grippers 89
Features 90
Grip Check node 91
About 93
Error messages overview 94
Gripper Program Template 94
Advanced Gripper Functions 96
Single Gripper 96
Multiple Grippers 99
4.8.5. Retro-compatibility of URCaps with legacy driver programs 102
4.9. Control over Universal Robots without URCaps 103
4.9.1. Gripper Toolbar 103
Overview 103
Features 103
Toolbar collapsed 103
Toolbar expanded 104
4.9.2. Demo Scripts 105
4.9.3. Custom Programs 106
4.9.4. Provided Variables and Functions 107
5. User Interface 110
6. Specifications 111
6.1. Technical dimensions 112
6.1.1. Couplings 113
6.1.2. Fingers and fingertips 121
Rack 121
Basic aluminum finger 122
Fingertip holder 122
Flat silicone fingertip 123

Grooved fingertip 124
6.2. Mechanical specifications 125
6.2.1. Specifications: 125
Payload and force 126
Maximum payload/External force vs. Custom finger design 127
Friction grasp and form-fit grasp 128
Maximum payload by grasp type 128
6.2.2. Center of mass and tool center point 129
6.2.3. Moment and force limits 131
6.3. Electrical specifications 132
7. Maintenance 133
7.1. Gripper cleaning 134
7.2. Periodic inspection 136
7.3. Rack & pinion mechanism cleaning 137
8. Spare Parts, Kits and Accessories 138
9. Troubleshooting 141
10. Warranty and Patent 143
11. Contact 144
12. Harmonized Standards, Declarations and Certificates 145
12.1. Translation of original EC declaration of incorporation 145
12.2. Applied standards 146
12.3. Ingress Protection Certificate 147

Revisions

Robotiq may modify this product without notice, when necessary, due to product improvements, modifications or changes in specifications. If such modification is made, the manual will also be revised, see revision information. See the latest version of this manual online at support.robotiq.com.

Revision 2019/03/13

- Updated mechanical specifications (Section 6.2)

Revision 2019/02/19

- Updated Section 6 to modify the grip force

Revision 2018/09/11

- Updated Section 3 according to the robot used (CB-Series vs. e-Series)
- Updated Section 4
  - Input & Output Registers
  - Control over Universal Robots depending on the robot software used (PolyScope 3.6 and later version vs. PolyScope 5.0 and later versions)
  - Added LED and move functions to the list of available functions
- Updated Section 8 with new spare parts, kits and accessories

Revision 2018/05/24

- Official release

Copyright

© 2019 Robotiq Inc. All rights reserved.

This manual and the product it describes are protected by the Copyright Act of Canada, by laws of other countries, and by international treaties, and therefore may not be reproduced in whole or in part, whether for sale or not, without prior written consent from Robotiq. Under copyright law, copying includes translation into another language or format.

Information provided by Robotiq in this document is believed to be accurate and reliable. However, no responsibility is assumed by Robotiq for its use. There may be some differences between the manual and the product if the product has been modified after the edition date.

The information contained in this document is subject to change without notice.

1. General Presentation

The terms "Gripper", "Robotiq Gripper", "Hand-E Gripper" and "Hand-E" used in the following manual all refer to the Robotiq Hand-E Gripper. The Robotiq Hand-E Gripper is a robotic peripheral designed for industrial applications. Its design makes it a unique robotic end-of-arm tool to quickly pick, place and handle a large range of parts of varying sizes and shapes.

Note

The following manual uses the metric system. Unless otherwise specified, **all dimensions are in millimeters**.

Note

The following section presents the key features of the Gripper and must not be considered as appropriate to Gripper operation, each feature is detailed in the appropriate section of the manual. Safety guidelines must be read and understood before any operation is attempted with the Gripper.

1.1. Gripper nomenclature

The Hand-E Gripper is a parallel gripper Its two fingers are actuated by a single motor.

Fig. 1-1: Robotiq Hand-E

Please refer to the **Scope of Delivery** section and **Spare Parts, Kits and Accessories** section for details on standard and optional parts. The Hand-E basic gripper unit includes aluminum fingers, as shown in the figure above.

The user can install fingers directly on the racks, or fasten fingertips to fingertip holders, which are in turn installed on the racks. Refer to the **Installing the Gripper onto the robot** section for more information on how to integrate custom fingers and fingertips to Hand-E.

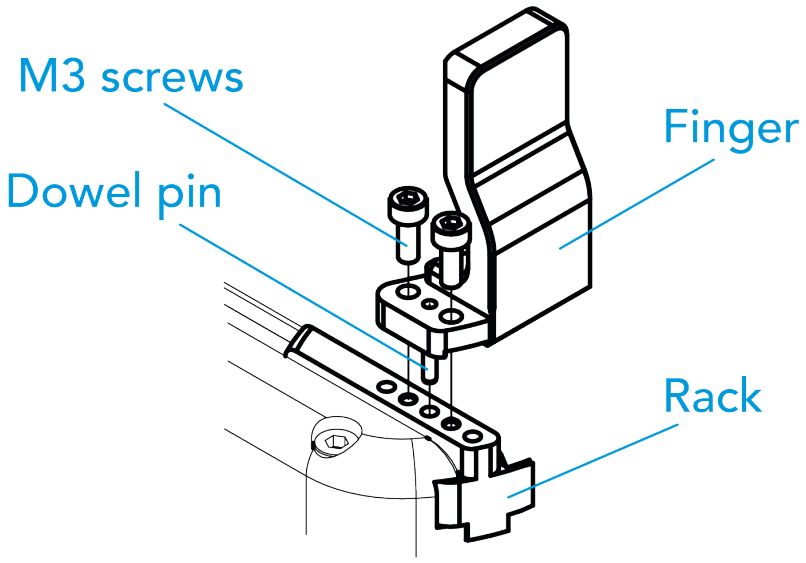

Fig. 1-2: Mounting of a finger on a rack

When ordered as a kit (please refer to the **Scope of Delivery** section), a fingertip starting kit is included (please refer to the **Spare Parts, Kits and Accessories** section). These fingertips should be mounted onto fingertip holders.

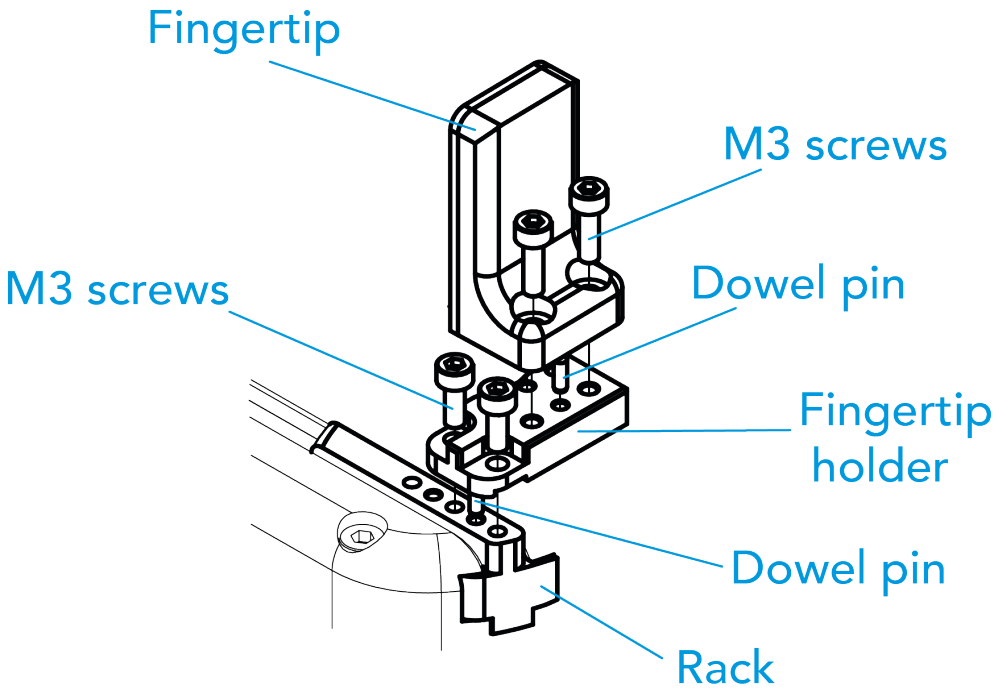

Fig. 1-3: Mounting of a fingertip on a fingertip holder (example)

Tip

It is possible to customize your own fingers or fingertips. You can install custom fingers directly on the racks and the fingertips on the fingertip holders.

1.2. Object picking

The Hand-E Gripper has a single actuator for opening and closing the fingers. It also allows internal gripping. The fingers can pick hollow parts from the inside by applying pressure with the outer surface of the fingers.

See the figure below for a representation and refer to the **Picking Features** section for details on the possible position commands of your Gripper.

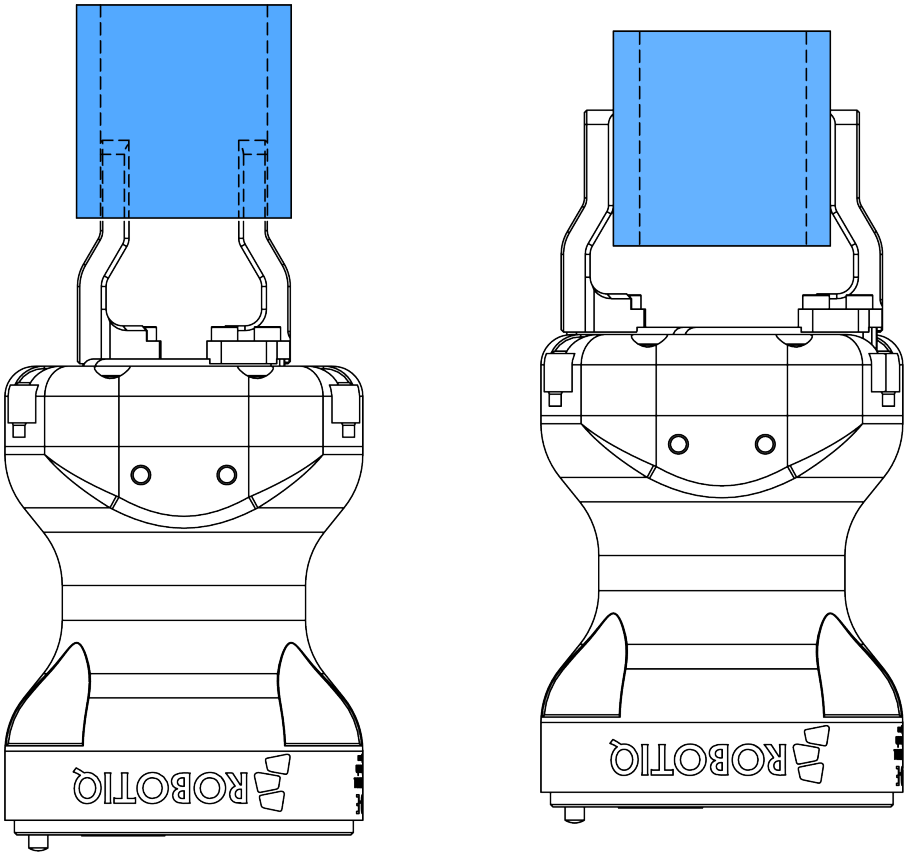

Fig. 1-4: Hand-E Gripper internal and external gripping.

1.3. Setup and control

The Gripper is powered and controlled directly via a single device cable that carries a 24V DC supply and Modbus RTU communication over RS-485. Please refer to the **Electrical Setup** section for wiring information and to the **Control** section for control of the Gripper (software packages are available for control via some types of robot controllers).

> **Info**
>
> Robotiq Universal Controller is available when industrial communication protocols are required (other then Modbus RTU over serial).

A gripper coupling is required for using Hand-E; the coupling will provide mechanical and electrical connectivity. Please refer to the **Mechanical Installation** section for installation of the coupling, to the **Technical dimensions** section for technical drawings, and to the **Spare Parts, Kits and Accessories** section for available couplings.

The Hand-E Gripper has an embedded object detection feature using indirect sensing methods. When picking an object with the "go to" command, the Gripper status will allow you to know if an object is picked or not via a simple object detection bit (0 or 1). When an object is detected, the Gripper will stop. If the object is being dropped, the Gripper will automatically close to keep the object until the object is detected or until the position target from the "go to command" is reached. For details on object detection, please refer to the **Control** section.

2. Safety

Warning

The operator must have read and understood all of the instructions in the following manual before handling the Robotiq Hand-E Gripper.

Info

The term "operator" refers to anyone responsible for any of the following operations on the RobotiqHand-E Gripper:

- Installation
- Control
- Maintenance
- Inspection
- Calibration
- Programming
- Decommissioning

This documentation explains the various components of the Robotiq Hand-E Gripper and general operations regarding the whole lifecycle of the product from installation to operation and decommissioning.

The drawings and photos in this documentation are representative examples; nonetheless, discrepancies may be observed between those and the delivered product.

2.1. Warning

Info

Any use of the Gripper in noncompliance of these warnings is inappropriate and may cause injury or damage.

Warning

- The Gripper needs to be properly secured before operating the robot.
- Do not install or operate a Gripper that is damaged or lacking parts.
- Never supply the Gripper with an alternative current source.
- Make sure all cord sets are always secured at both ends, at the Gripper and at the robot.
- Always meet the recommended keying for electrical connections.
- Make sure no one is in the robot and/or Gripper path before initializing the robot's routine.
- Always meet the Gripper's payload specifications.
- Set the Gripper's pinch force and speed accordingly, based on your application.
- Keep fingers and clothes away from the Gripper while the power is on.

- Do not use the Gripper on people or animals.
- For welding applications, make sure there are no Gripper parts on the ground path of the welding power source.

Risk assessment and final application:

The Robotiq Hand-E Gripper is meant to be used on an industrial robot. The robot, the Gripper and any other equipment used in the final application must be evaluated via a thorough risk assessment. It is the robot integrator's duty to ensure that all local safety measures and regulations are met. Depending on the application, there may be risks that require additional protection/safety measures; for example, the work-piece the Gripper is manipulating might be inherently dangerous to the operator.

2.2. Intended Use

The Gripper unit is designed for gripping and temporarily securing or holding objects.

Caution

The Gripper is not intended for applying force against objects or surfaces.

The product is intended for installation on a robot or other automated machinery and equipment.

Info

Always comply with local and/or national laws, regulations and directives on automation safety and general machine safety.

The unit should be used exclusively within the range of its technical data. Any other use of the product is deemed improper and unintended use. Robotiq will not be liable for any damages resulting from any improper or unintended use.

3. Installation

The following subsections will guide you through the installation and general setup of your Robotiq Hand-E Gripper.

Warning

Before installing:

- Read and understand the safety instructions related to the Hand-E Gripper.
- Verify your package according to the scope of delivery and your order.
- Have the required parts, equipment and tools listed in the requirements readily available

Warning

When installing:

- Meet the recommended environmental conditions.
- Do not operate the Gripper, or even turn on the power supply, before it is firmly anchored and the danger zone is cleared. The fingers of the Gripper may move and cause injury or damage.

3.1. Scope of Delivery

3.1.1. Robotiq Hand-E Gripper UR Kit

Standard upon delivery

- Robotiq Hand-E Basic Gripper Unit: **HND-GRP-001**
  - Hand-E Aluminum Finger Kit
  - Screw kit
- USB to RS485 signal converter: **ACC-ADT-USB-RS485**
- Coupling for connection to the robot controller: **GRP-CPL-062**

> **Info**
>
> Please refer to the **Spare Parts, Kits and Accessories** section for a list of available couplings.

- Robotiq device cable: **CBL-COM-1065-10-HF**

> **Caution**
>
> The following are not included in the standard delivery:
>
> - Options such as adapter plates or couplings for mounting on various industrial robots, fingertips or finger pads.
> - Hardware required for options; accessories or fixtures for the Hand-E Gripper, unless specified.
> - Power supply units, power supply wiring or fuses.

> **Info**
>
> When bought as a kit, the Hand-E Gripper will come in a package with the appropriate coupling, fingers/fingertips and cabling. Please refer to the **Spare Parts, Kits and Accessories** section.

3.2. Required Tools and Equipment

The following tools are required to install the Hand-E Gripper:

- 4 mm hex key to mount the Gripper onto its coupling.
- Metric hex key according to your coupling to mount the coupling onto the robot.

Optional tools if installing fingertip/holder kits: HND-FIN-ALU-KIT, HND-TIP-RUB-KIT, HND-TIP-VGR-KIT, HND-TIP-HLD-KIT

- 2,5 mm hex key

The following parts are required for setup :

- Power supply (see below).
- Fuse, see information below.
- Emergency stop is not provided, but its use is strongly advised.

The Gripper needs to be supplied by a DC voltage source. This power supply is not included with the Gripper. Required power supply must match the Robotiq device. The following table shows the specifications with regards to the power supply required to operate the Gripper and the optional Robotiq Controller.

SPECIFICATION	VALUE
Output voltage	24 V DC ±10%
Output current	1 A
Overcurrent	Recommended power supply with internal protection, otherwise fusing is required. 2 A fuse at 25°C [77°F][1]

Table 3-1: Hand-E power supply requirements.

[1] Suggested fuse is a: Phoenix Contact # 0916605 2 A thermal, use AWG #20 wiring.

Warning

If your power supply could exceed the specified regulation, over-voltage protection is required.

Robotiq recommends the use of the following power supplies:

- For the 1A output current: TDK-Lambda DPP Series, *100W Single Output DIN Rail Mount Power Supply*: **DPP30-24**.

Tip

Optional Robotiq Universal Controller can use the same power supply.

3.3. Environmental and Operating Conditions

CONDITION	VALUE
Minimum storage/transit temperature	-30°C [-22°F]
Maximum storage/transit temperature	60°C [140°F]
Minimum operating temperature	-10°C [14°F]
Maximum operating temperature	50°C [122°F]
Humidity (non-condensing)	20-80% RH
Vibration	< 0.5G
Other	IP 67

Table 3-2: Environmental and operating conditions of the Hand-E Gripper.

3.4. Mechanical Installation

3.4.1. Installing the fingers/fingertips/holders on the Gripper

The figures below list the material and tools needed to mount fingers or fingertips/holders onto the racks of the Hand-E Gripper.

NO	ITEM
1	HAND-E ALUMINUM FLAT FINGER
2	SOCKET HEAD CAP SCREW M3-0.5 X 8mm
3	DOWEL PIN M2 X 6mm LG.

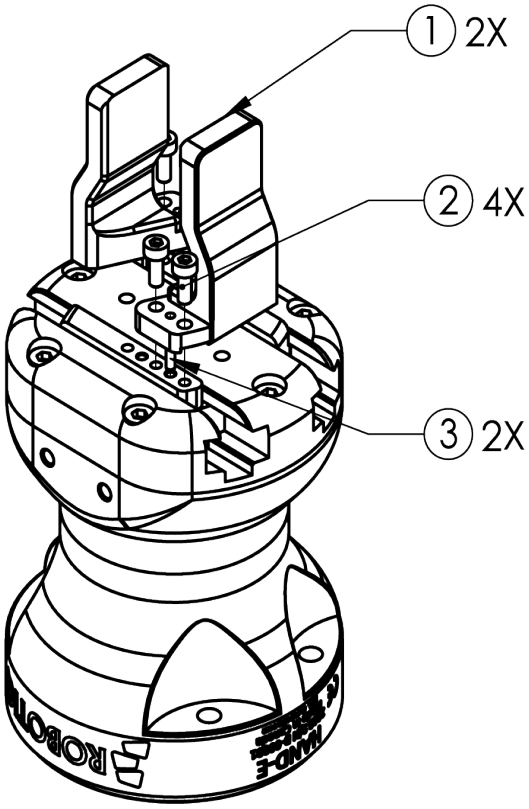

Fig. 3-1: Mounting the fingers on the racks

NO	ITEM
1	HAND-E RUBBER FLAT FINGERTIP
2	DOWEL PIN M2 X 6mm LG.
3	SOCKET HEAD CAP SCREW M3-0.5 X 8mm
4	FINGERTIP HOLDER
5	SOCKET HEAD CAP SCREW M3-0.5 X 8mm

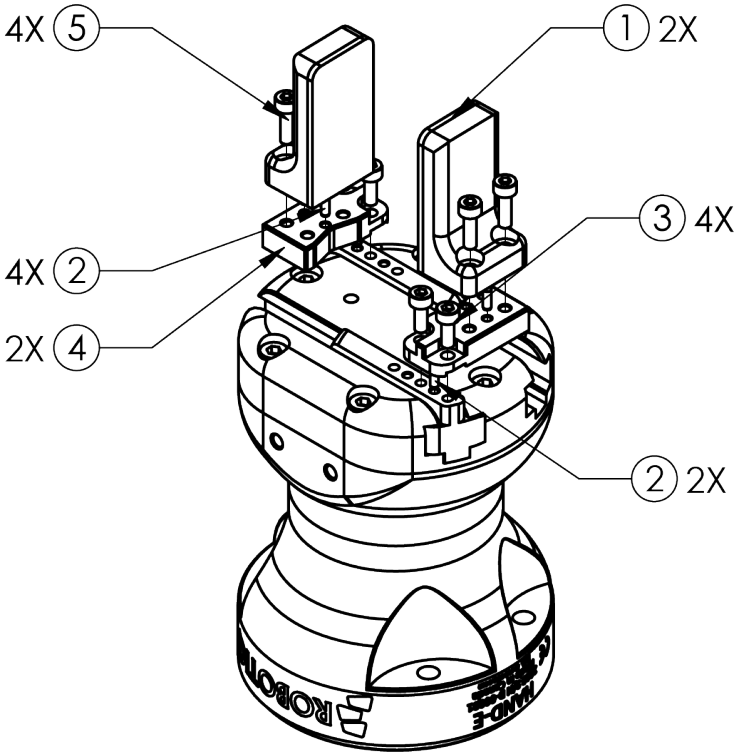

Fig. 3-2: Mounting fingertips on holders (and then on the racks)

3.4.2. Installing the Gripper onto the robot

Single Gripper

Use a coupling to attach the Gripper to the robot. Be sure to use the appropriate coupling for your robot model. If there is no coupling for your robot, you can process a blank coupling or Robotiq can create a custom version for you. Some couplings may require an additional adapter plate. To create your own coupling and/or adapter plate you can refer to the **Couplings** section. To see the details of the available couplings and adapter plates, please refer to the **Spare Parts, Kits and Accessories** section.

Here are the steps to follow to mount the Gripper to your robot (see figure below). Note that all screws must be locked in place using **medium strength threadlocker**.

1. Screw the adapter plate or the coupling to the robot.
2. Screw the coupling to the adapter plate (if applicable).
3. Screw the Gripper onto its coupling.

PROVIDED PARTS:

NO	GRP-CPL-002 or AGC-CPL-XXX-002
1	HAND-E GRIPPER COUPLING
2	M5x0.8 X 25mm SHCS
3	M5 Tooth lock washer

NO	AGC-APL-XXX-002 (OPTIONAL)
4	HAND-E GRIPPER ADAPTER PLATE
5	M6-1.0 5mm LHCS
6	M6 x 12mm Indexing pin (H8 tolerance)

TOOLS NEEDED:

-4 mm ALLEN KEY
-MEDIUM STRENGTH LOCTITE

Shown with optional adapter plate
Robot side screws are available only for specific robot kits.

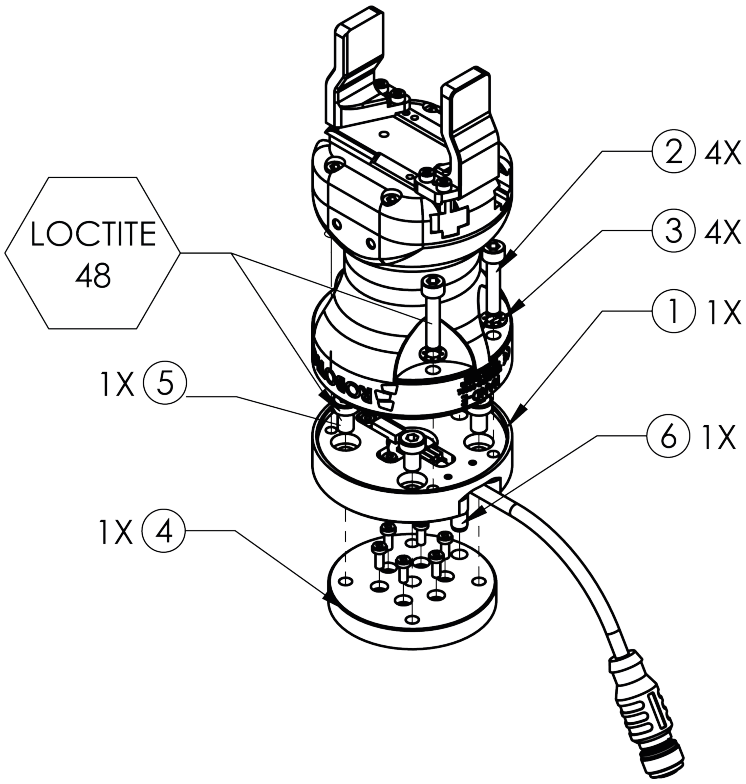

Fig. 3-3: Installing the Gripper to a robot using an adapter plate and a coupling.

Multiple Grippers

When installing multiple grippers on one robot, every gripper must have its own coupling.

1. Install a mounting plate (not included) on the robot arm (AGC-APL-159-02).
2. Mount the grippers' couplings on the mounting plate using the provided M6 X 10mm screws.
3. Mount the grippers onto the coupling using the provided M5 X 35 mm screws.

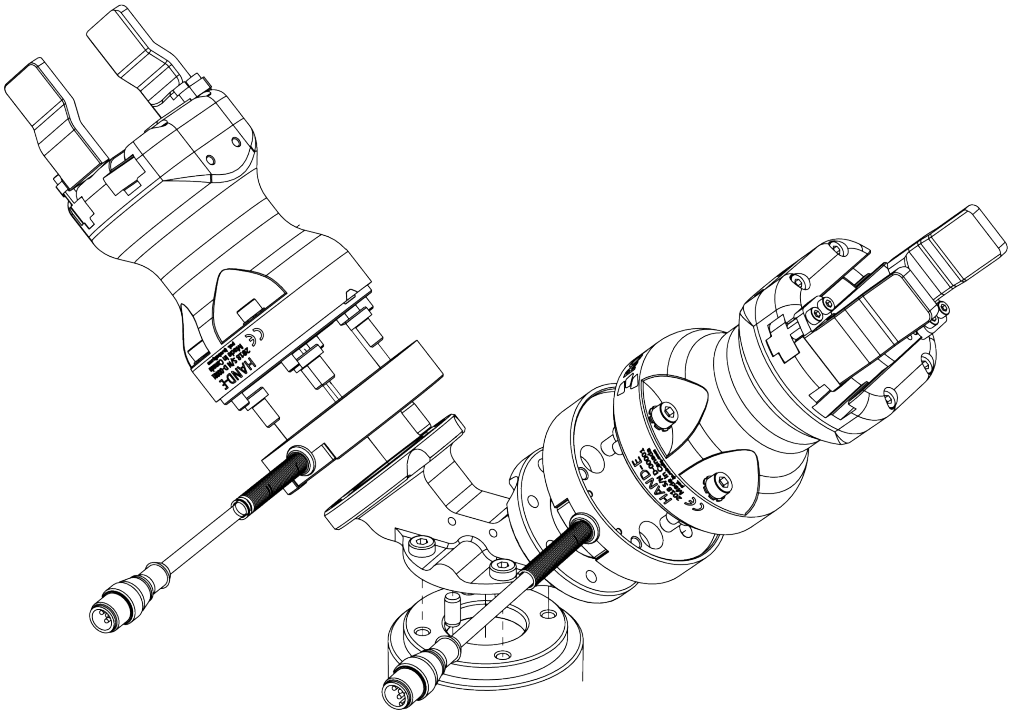

Fig. 3-4: Dual Hand-E Gripper Configuration

3.5. Electrical Setup

Power and communication are established with the Hand-E Gripper via a single device cable. The device cable provides a 24V power supply to the Gripper and enables serial RS485 communication to the robot controller.

> **Info**
>
> RS485 signals (485+, 485- and 485 GND) are isolated from the main 24V power supply. GND can be connected to any other ground reference as long as the voltage potential between the grounds does not exceed 250V. Grounding reference is at the user's discretion.

3.5.1. Pinout Interface

The Gripper interfaces with its coupling via a 10-spring pin connector located on its outer surface.

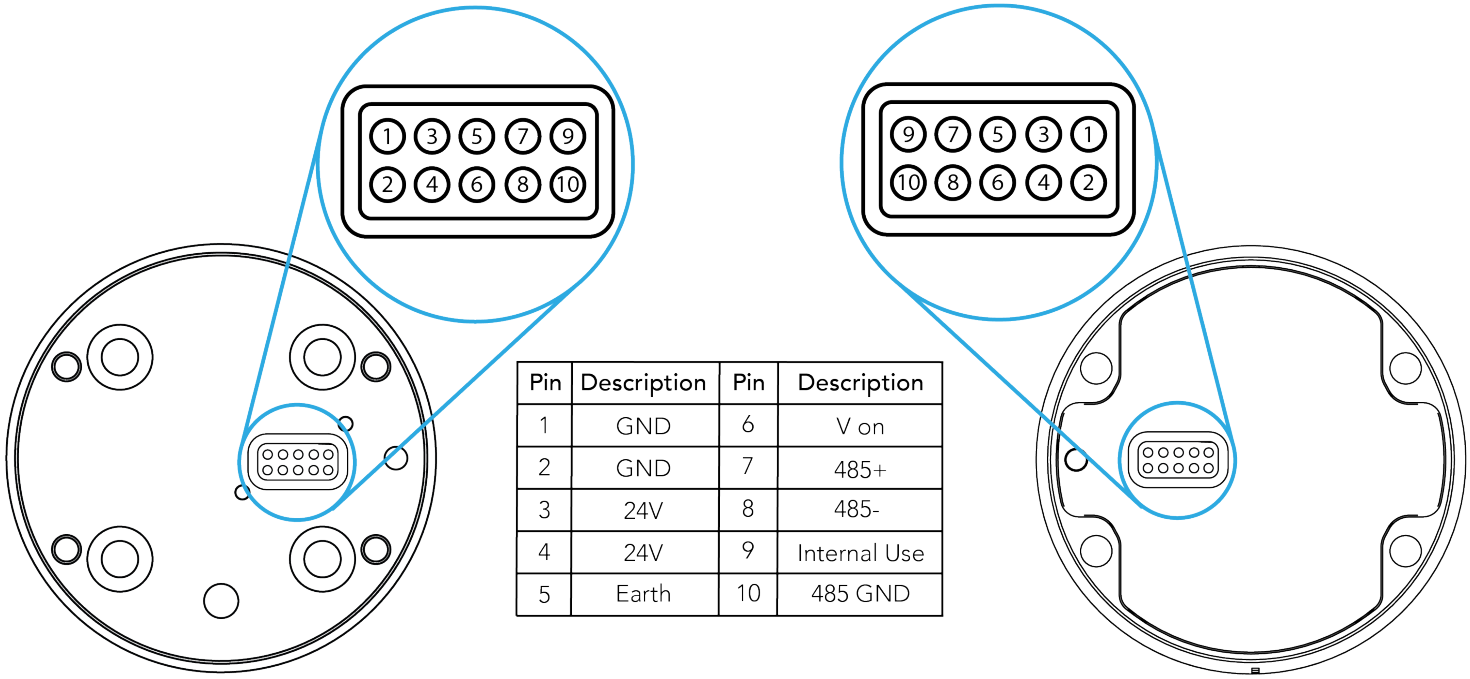

Pin	Description	Pin	Description
1	GND	6	V on
2	GND	7	485+
3	24V	8	485-
4	24V	9	Internal Use
5	Earth	10	485 GND

Coupling Top View

Gripper Bottom View

> **Info**
>
> The coupling used in the figure above is used for reference only and corresponds to bolt pattern ISO 9409-1-50-4-M6.

3.5.2. Coupling to controller

An optional Robotiq Universal Controller may be used between the Gripper and the network/robot controller if fieldbus communication is required.

If a Robotiq Universal Controller is used, please refer to the instruction manual of the Robotiq Universal Controller. The figure below represents the wiring scheme of the Hand-E Gripper with device cable, power supply, fuse (refer to the **Required Tools and Equipment** section) and grounding.

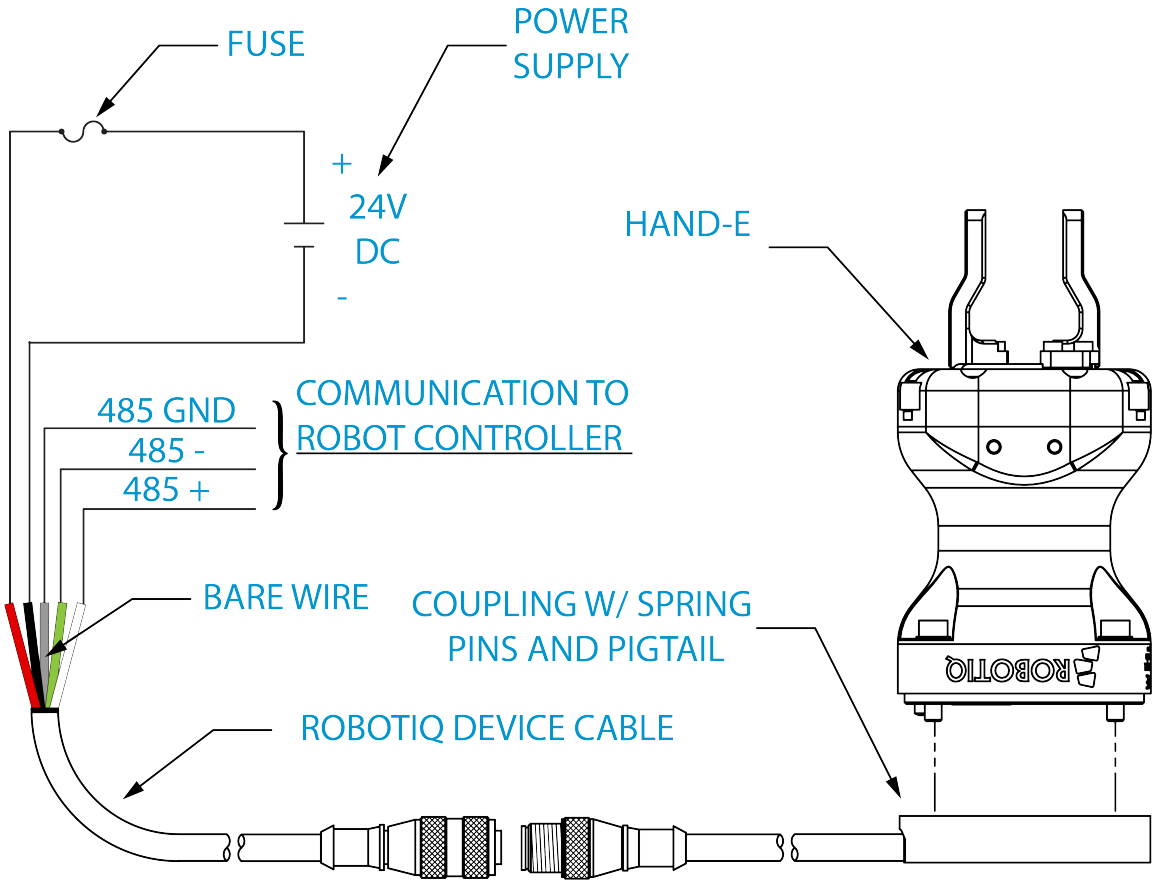

Fig. 3-5: Robotiq Hand-E with pigtail cable and device cable wiring scheme.

Caution

Use proper cabling management. Make sure to leave enough slack in the cabling to allow movement of the Gripper along all axes without pulling out the connectors. Always protect the controller side (robot side) connector of the cable with a strain relief cable clamp.

The figure below illustrates the Hand-E Gripper pigtail connector from the coupling (**GRP-CPL-062** or **AGC-CPL-XXX-002**), the device cable on the robot side (**CBL-COM-2065-10-HF**) and their associated pinout.

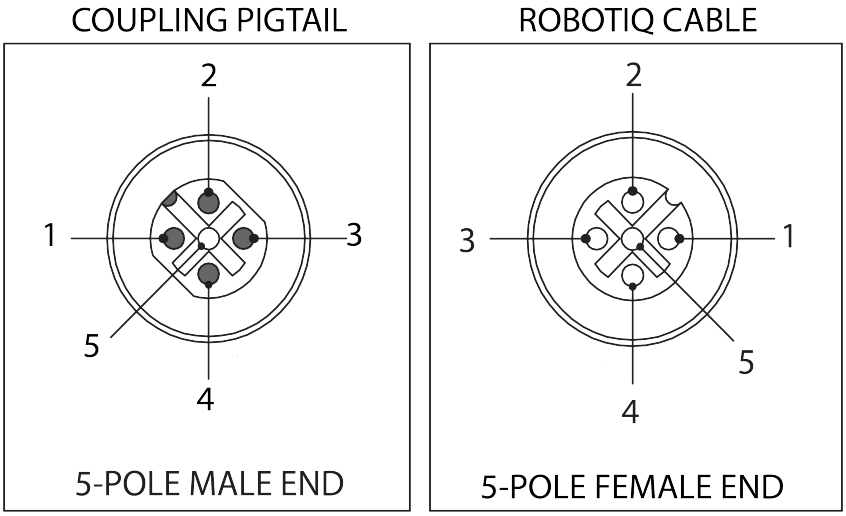

PIN	END OF CABLE COLOR	SIGNAL
1.	(SHIELD)	RS485 GND
2.	RED	24 V
3.	BLACK	GND
4.	WHITE	RS485 +
5.	GREEN	RS485 -

Table 3-3: Pinout of the Hand-E Gripper pigtail and device cable.

If additional cables are used, suggested cable specifications are as follows:

Power supply, fusing

- minimum #22 AWG TEW, 300 V or 600 V

RS485 signal

- minimum #24 AWG TEW, 300 V or 600 V
- A and B signals must be balanced at 120 Ohms

Single Gripper

Prior to any software installation on Universal Robots, connect the white, blue and bare wires to the Robotiq RS-485 signal converter (ACC-ADT-RS485-USB) as shown in the figure below. Also connect the red (24V) and black (0V) wires in the terminal blocks of the robot controller.

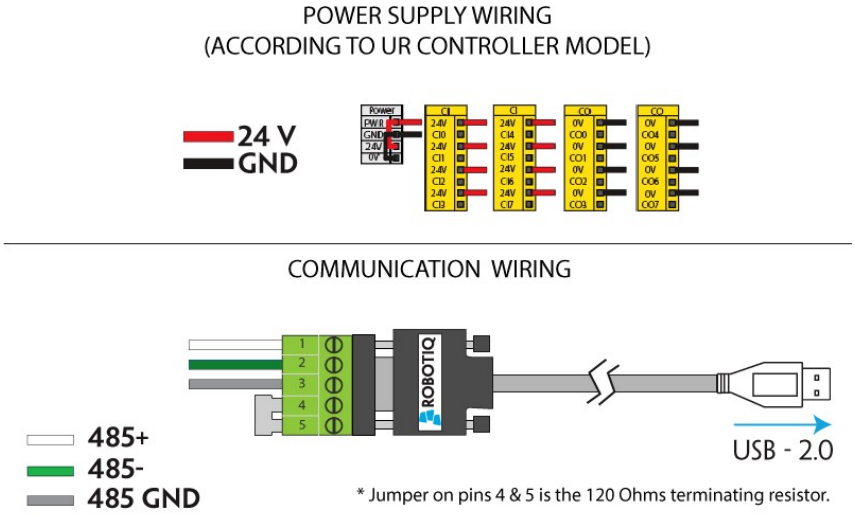

Fig. 3-6: Hand-E Gripper wiring to Universal Robots controller.

Multiple Grippers

It is possible to connect and control up to four grippers on the same UR robot. Only one USB to RS485 converter (ACC- ADT-USB-RS485) must be used. Use M12 splitters (ACC-SPLIT-M12-2:1) to connect all the grippers pigtails to one 10m cable (CBL-COM-2065-10-HF) that connects to the RS485 to RS232 converter.

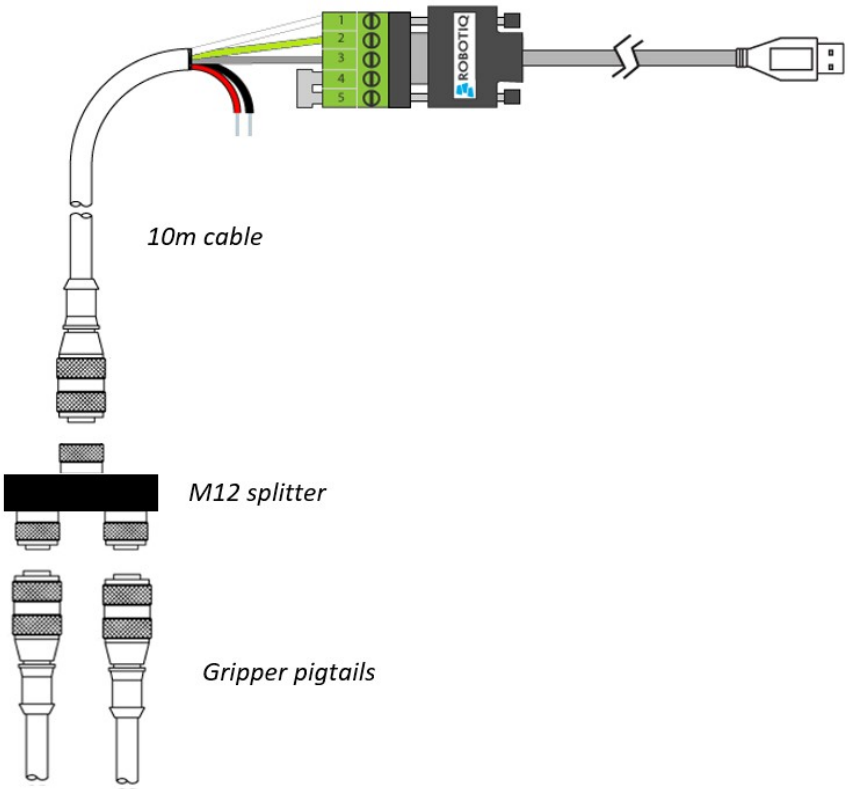

Fig. 3-7: Multiple grippers wiring.

3.6. Testing the Gripper with the Robotiq User Interface (RUI)

Once installed and properly secured, your Robotiq Hand-E Gripper should be tested with the Robotiq User Interface test software using the provided USB converter. To do so :

1. Follow the instructions to install the Robotiq User Interface, or RUI (refer to the instruction manual of the RUI)

   Use the provided RS-485 to USB converter ACC-ADT-USB-RS485 (refer to the figure below) to plug into a PC with the Robotiq User Interface installed.

2. Power up your Gripper with the previously recommended power supply.
3. Execute the RUI software and select "auto-connect" on the connection screen.
4. You are now connected to your Gripper; you can click "activate" to begin using the Gripper.

> **Caution**
>
> The Activate command will initiate movement of the Gripper for the auto-calibration procedure. Do not interfere with the Gripper. Be sure you have met robot safety measures.

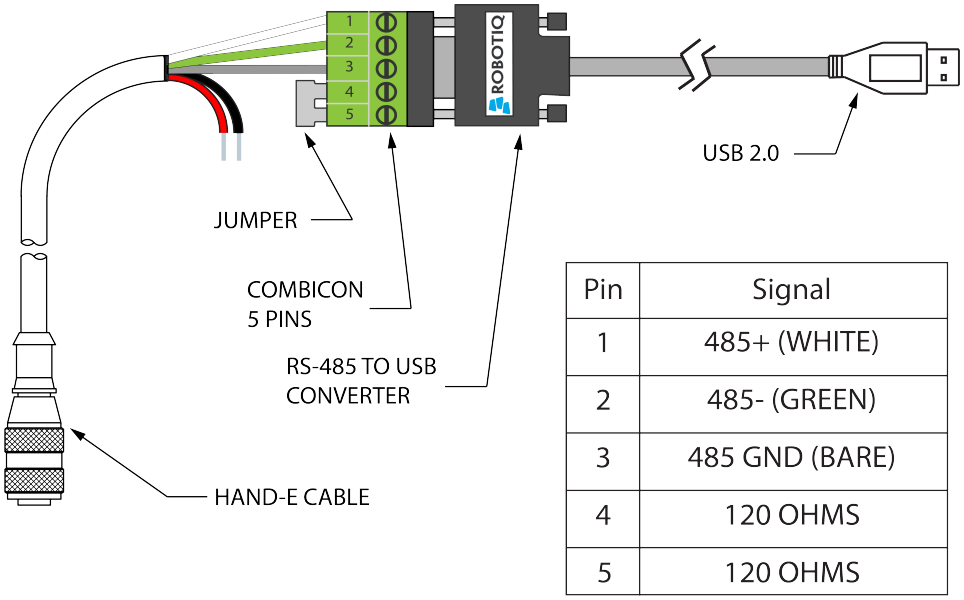

Pin	Signal
1	485+ (WHITE)
2	485- (GREEN)
3	485 GND (BARE)
4	120 OHMS
5	120 OHMS

*24 V AND GND ARE NOT SUPPLIED VIA USB
*120 Ohms resistance JUMPER BETWEEN PINS 4 AND 5

Fig. 3-8: RS-485 to USB converter ACC-ADT-USB-RS485 pinout.

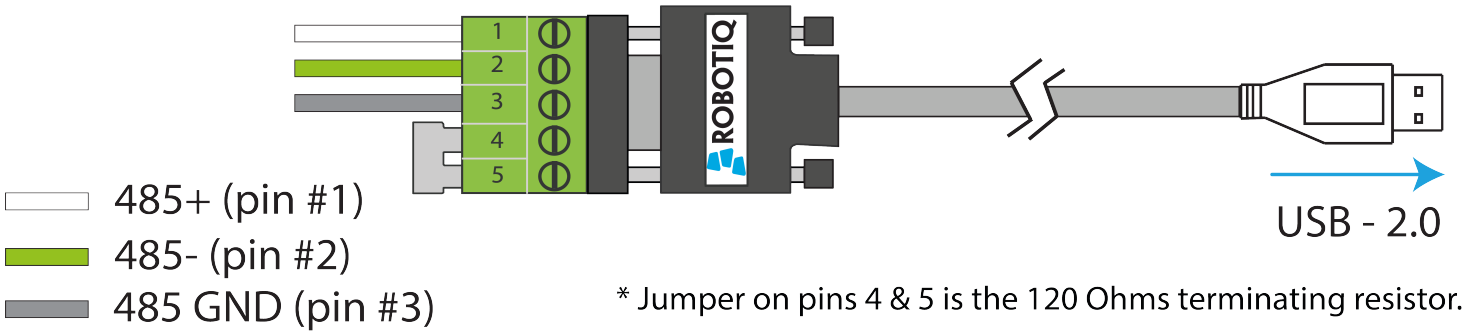

Fig. 3-9: Wiring possibilities of the USB to RS-485 converter.

Tip

With the RUI controlling the Gripper, you can go to the "view" menu to see input and output register values to further your understanding on how to command the Gripper. You can also test gripping your parts with various speed and force settings. Please refer to the **Control** section for details.

3.7. Installation for Universal Robots

The table below shows which Robotiq software to use with your Universal Robots controller. If you are using a CB3 or CB3.1 controller, it is recommended to use the Hand-E Gripper URCaps Package.

Robotiq Software	Controller CB1	Controller CB2	Controller CB3	Controller CB3.1	e-Series Controller
Driver Package (includes Gripper toolbar)	Incompatible	Compatible	Compatible	Compatible	Incompatible
Robotiq Grippers URCap Package 1.2.1 and earlier versions	Incompatible	Incompatible	Compatible	Compatible	Incompatible
Robotiq Grippers URCap Package 1.3.0	Incompatible	Incompatible	Incompatible	Compatible	Incompatible
Robotiq Grippers URCap Package 1.3.1 and later versions	Incompatible	Incompatible	Incompatible	Compatible	Compatible

Table 3-4: Compatibility between Robotiq software and robot controller

Refer to the **URCap Package** section for the installation of the UR software package for Hand-E.

Caution

The robot's PolyScope version must be 3.5 or later in order to install the URCap.

Caution

Prior to use over Universal Robots, adjust the payload and the center of gravity in the **Installation** tab (refer to the **Mechanical specifications** section).

Caution

Please refer to the **Installing URCap Package** section to configure the grippers properly before controlling and programming them.

3.8. URCap Package

Robotiq provides you with a *Universal Robots* URCap package that enables direct serial communication to your UR controller.

> **Info**
>
> To get the URCap package for your UR controller, browse to Hand-E's support product page.

Make sure the Hand-E Gripper is properly mounted to the robot arm. Refer to the **Mechanical Installation** section for detailed information on the mechanical installation. Before proceeding with the installation of the URCap package, make sure your Universal Robots controller is compatible with the package (refer to the **Installation for Universal Robots** section).

> **Caution**
>
> The robot's PolyScope version must be 3.5 or later in order to install the URCap.

The Gripper's URCap package contains:

- The URCap for the Gripper;
- The Gripper toolbar;
- The Gripper node.

> **Tip**
>
> For other robots, where no driver package is available, we recommend the use of the Robotiq Universal Controller which allows fieldbus communication. Available communication protocols with this Universal Controller are:
>
> - Modbus TCP
> - EtherNet IP
> - EtherCAT
> - PROFINET
> - DeviceNET
> - CANopen

For details on controlling the Gripper, please refer to the **Control** section.

> **Info**
>
> Please refer to the **Control** section for detailed information on how to program using the URCap package.

3.8.1. Installing URCap Package

Single Gripper

Make sure the Hand-E Gripper is properly mounted to the robot arm. Refer to the **Mechanical Installation** section for detailed information on the mechanical installation. Before proceeding with the installation of the URCap package, make sure your Universal Robots controller is compatible with the package (refer to the **Installation for Universal Robots** section).

Follow this procedure to install the Hand-E Gripper URCap package:

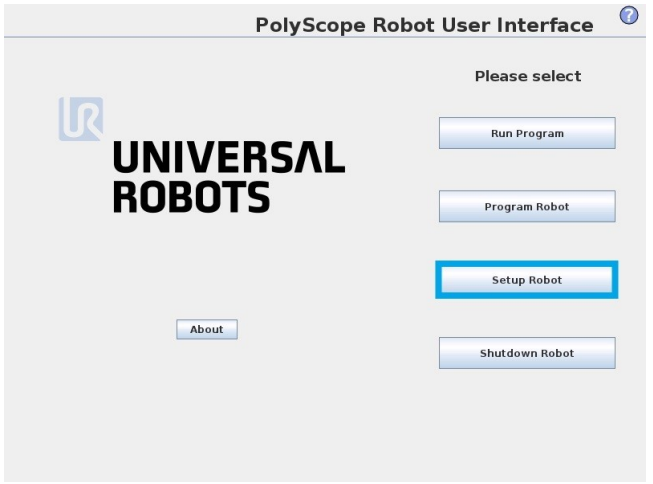

- Make sure that your PolyScope version is up-to-date and that your Universal Robots controller is compatible with the Gripper's URCap package.
- Browse to support.robotiq.com and click on the Hand-E Gripper product page.
- Download the RAR file and extract its content on the root of a blank USB stick.
- Insert the USB stick in the UR teach pendant or controller.
- Go to **Setup Robot**.
- Tap **URCaps Setup**.

> **Tip**
>
> If you wish to know what version of PolyScope you are using, go to the PolyScope home page and tap the **About** button. A window containing the Universal Robots software version will pop up.

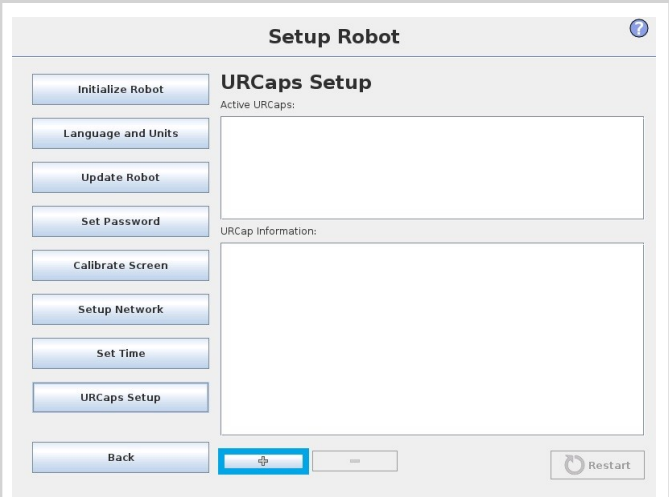

- Tap the **plus** button (**+**) to add the Gripper's URCaps package.
- Open **Robotiq_Grippers-X.X.X.urcap** from the USB storage device.

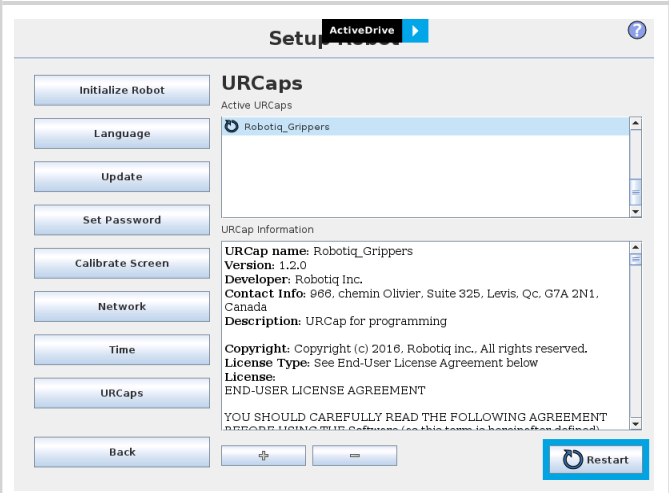

- Restart PolyScope to complete the URCap installation. By doing so, you accept the License Agreement that is detailed in the URCap information text box (please refer to the **License Agreement** section below).

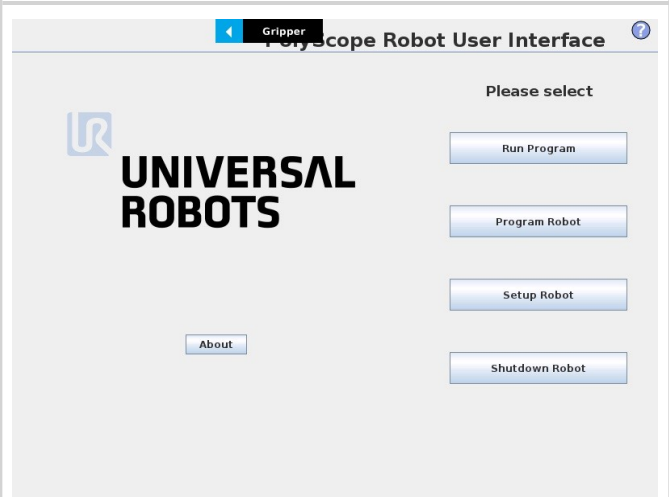

- When PolyScope reopens, the Gripper toolbar will appear on the screen.

Multiple Grippers

It is possible to connect and control up to four grippers on the same UR robot.

Only one USB to RS485 converter (ACC- ADT-USB-RS485) must be used. Use M12 splitters (ACC-SPLIT-M12-2:1) to connect all the grippers pigtails to one 10m cable (CBL-COM-2065-10-HF) that connects to the USB to RS485 converter.

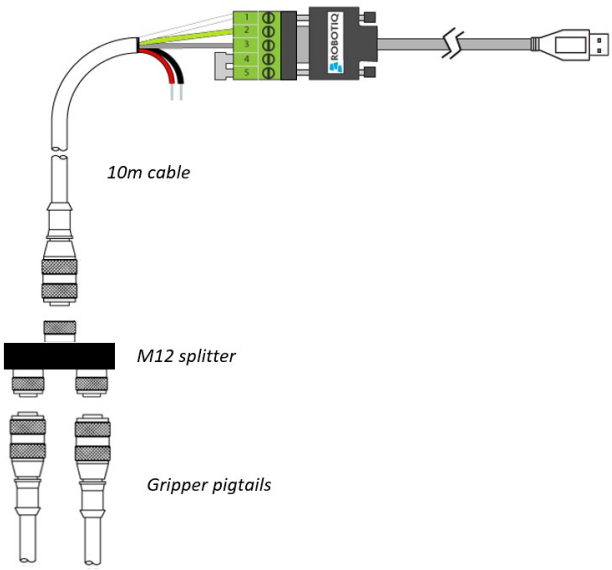

Fig. 3-10: Wiring for multiple grippers.

When installing multiple grippers on one UR robot, their gripper ID must be set properly. To do so, perform the following steps for each Gripper.

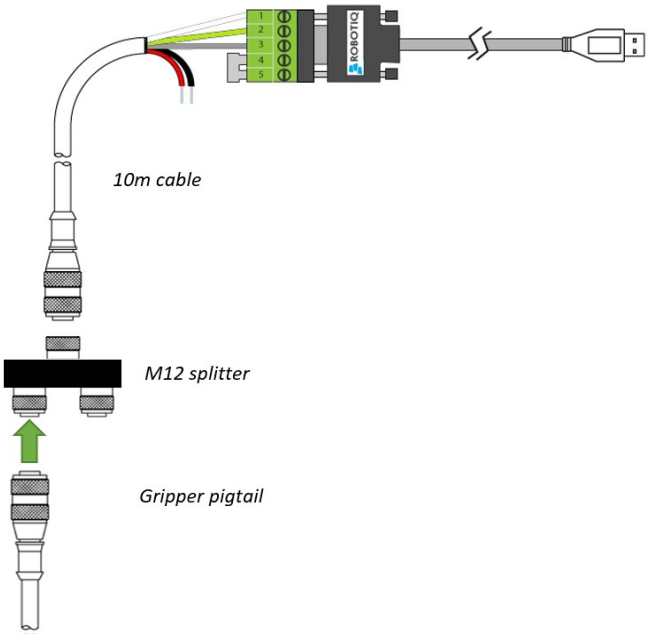	• Connect only one gripper at the time using the M12 splitter.
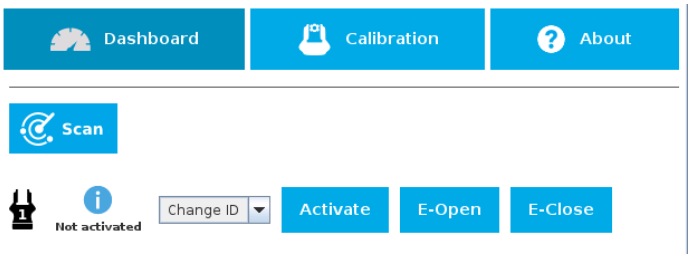	• From the PolyScope home page, go to **Program Robot** and then tap the **Installation** tab. • Tap on **Gripper**. • Select the **Dashboard** menu. • Tap the **Scan** button to detect Grippers.

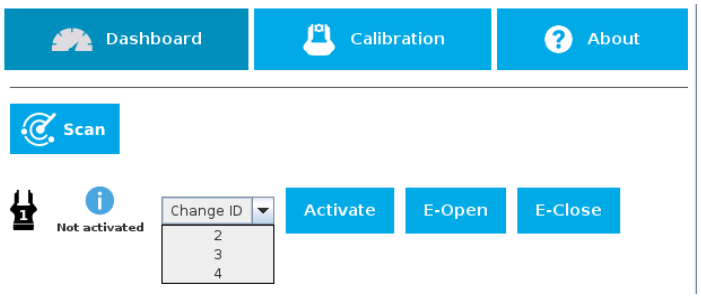

- Change the Gripper ID to the desired one.
- Make sure it is different from the other Gripper IDs.
- Gripper ID is saved to the Gripper's internal memory. ID will be kept at all time.
- Click on **Activate** to activate the Gripper.
- Perform the same routine for all grippers, if applicable, connecting only one at the time.

> **Caution**
>
> Make sure all grippers have different IDs. With their factory settings, all grippers have Gripper ID set to 1. If you have more than one gripper connected with the same ID, communication issues will arise.

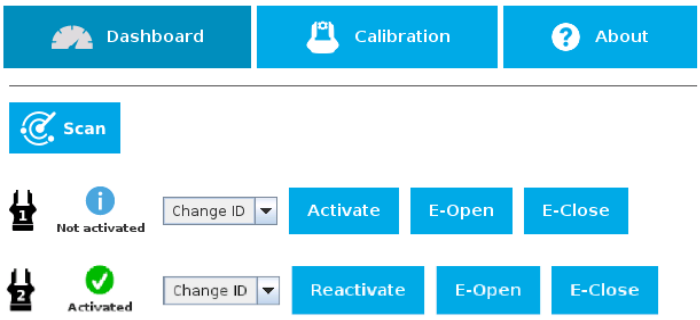

- Once all grippers IDs have been set, connect them all to the M12 splitter.
- Go back to the **Configure** tab and confirm that all grippers are recognized and can be controlled.

3.8.2. Uninstalling URCap Package

If you wish to uninstall the Hand-E Gripper URCap, follow this procedure:

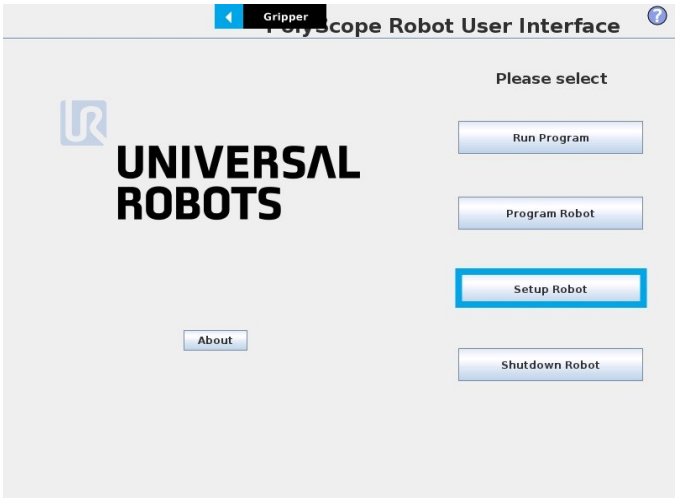	• Go to **Setup Robot**.
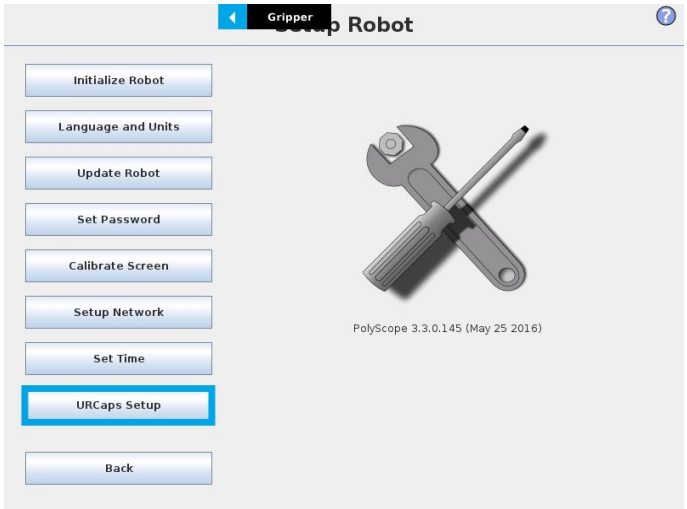	• Tap **URCaps Setup**.
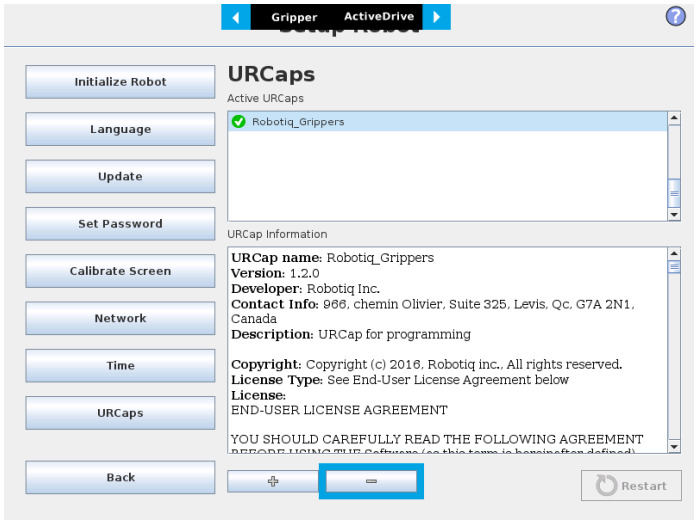	• In the **Active URCaps** text box, tap the **Gripper** URCap. • The Gripper URCap should be highlighted. • Tap the **minus** button (**-**) to uninstall the URCap. • Restart PolyScope to complete the uninstallation process.

3.8.3. License Agreement

END-USER LICENSE AGREEMENT

YOU SHOULD CAREFULLY READ THE FOLLOWING AGREEMENT BEFORE USING THE Software (as this term is hereinafter defined). Using the Software indicates your acceptance of the agreement. If you do not agree with it, you are not authorized to use the Software.

IMPORTANT-READ CAREFULLY: This End-User License Agreement (the “Agreement”) is a legal agreement between you and the Licensor (as this term is hereinafter defined), the licensor of the Software. This Agreement covers the Software. The Software includes any “on-line” or electronic documentation and all modifications and upgrades related thereto. By installing, or otherwise using the Software, you agree to be bound by the terms of this Agreement. If you do not agree to the terms of this Agreement, the Licensor cannot and does not license the Software to you. In such event, you must not use or install the Software.

1. Definition.
    a. “UR” means Universal Robots A/S, a corporation incorporated under the laws of Denmark, having its registered office at Energivej 25, DK-5260 Odense S, which specializes into the conception, advanced manufacturing and sale of robotic products (the “UR’s Business”);
    b. “Software” means any of the Licensor’s softwares provided to its customers for the purposes mentioned in Sub-section 1.4 hereof including their modifications and upgrades and their related materials;
    c. “Licensor” means Robotiq inc., a corporation incorporated under the laws of Quebec, having its registered office at 500-966 chemin Olivier, Lévis, Québec, Canada, G7A 2N1, which specializes into the conception, advanced manufacturing and sale of robotic products (the “Licensor’s Business”);
    d. “End-User” means a customer authorized pursuant to this Agreement to install or use the Software in order to make a specific product from the Licensor’s Products compatible and functional with a specific product of the UR’s Product;
    e. “Licensor’s Products” means those products developed by the Licensor in the course of the Licensor’s Business;
    f. “UR’s Products” means those products developed by UR in the course of the UR’s Business;
    g. “Licensor’s Authorized Representatives” means and includes the Licensor and Licensor’s authorized vendors, resellers, distributors and licensors;
    h. “Purchase Agreement” means an agreement between the End-User and the Licensor pursuant to which the End-User purchased one or more of the Licensor’s Products.
2. License. Subject to the terms and conditions hereof, the Licensor grants to the End-User a personal, temporary, non-exclusive, non-assignable and non-transferable and revocable license to use the Software in accordance with the terms and conditions hereof.
3. Software and Documentation. The Licensor may provide, if applicable, all documentation containing the detailed specifications for operation and use of the Software, which Software shall be used in accordance with such documentation. This documentation, if applicable, will be provided, wholly or in part, within (i) this Agreement, (ii) the Licensor’s Web site http://robotiq.com/ (iii) the Licensor’s Products and the Purchase Agreement therewith, or (iv) any other agreement, document, support, whatsoever decided by the Licensor.

    The use of the Software requires the Licensor’s Products, UR’s Products, compatible systems and certain software (which may require some expenses), may require periodical updating and may be affected by such elements. Most equipment will be compatible with the Software. However, the Software may not function on certain types of equipment.
4. Modifications and Upgrades. The Licensor shall be under no obligation to provide any upgrade or modification to the Software. However, the End-User shall be entitled to receive free of charge all modifications and upgrades of the Software provided by the Licensor if, at such time, the End-User is not in default in respect of any of its obligation contained herein. Such modifications and upgrades of the Software shall be installed by the End-User itself by consulting the Licensor’s Website http://robotiq.com/ where a link to proceed to such installation will be made available thereof. A new version of the Software shall not be covered by this Section 4 but shall require that a new End-User Software License Agreement be entered into between the Licensor and the End-User.

5. Fees. The grant by Licensor to the End-User of the present license shall be free to the extent that the End-User agrees and complies to the term and conditions herein at all time.
6. Maintenance. During the term of this Agreement, the Licensor will maintain the Software in an operable condition and will make available any corrections and improvements as are generally incorporated in the Software by the Licensor without additional charge to the End-User. The Licensor may temporarily and without notice suspend or limit access to the Software if necessary or desirable in order to maintain, restore, modify or repair any part of the Software or for any reason related to business. During such works, the Software will not be available but the Licensor undertakes to deploy its best efforts to perform such works at appropriate times and to limit any inconvenience arising therefrom.
7. Title to Software. The licensed Software is composed of confidential data and trade secrets and is proprietary to and constitutes trade secret information and intellectual property of the Licensor. Title and ownership rights to the Software, including the intellectual property rights related thereto, shall remain with the Licensor. The End-User agrees to maintain the confidential nature of the Software and related materials provided for the End-User's own internal use under this Agreement. The license granted herein does not include the right to sublicense to others, and may not be assigned to others, in whole or in part, without the prior written consent of the Licensor. The End-User may not or allow others to modify or prepare directive works, copy (except for normal backups for recovery purposes), reproduce, republish, reverse engineer, upload, post, transmit, or distribute, in any manner, the Software.
8. Restricted Use. The Software shall be used solely and exclusively by the End-User and its employees for the purpose mentioned in Sub-section 1.4 hereof. Any other use of the Software, including resell derivative modifications or extensions, is expressly prohibited.
9. Exclusion of Warranty on Software. The End-User expressly acknowledges and agrees that use of the Software is at the End-User sole risk. The Software is provided "AS IS" and without warranty of any kind. THE LICENSOR AND THE LICENSOR'S AUTHORIZED REPRESEN-TATIVES DO NOT WARRANT THAT Software WILL BE FREE OF ERRORS AND YOU ACKNOWLEDGE THAT THE EXISTENCE OF ANY SUCH ERRORS DOES NOT CONSTITUTE A BREACH OF THIS AGREEMENT. TO THE EXTENT PERMITTED BY LAW LICENSOR AND LICENSOR'S AUTHORIZED REPRESEN-TATIVES EXPRESSLY DISCLAIM ALL WARRANTIES, EXPRESS OR IMPLIED, INCLUDING , BUT NOT LIMITED TO, THE IMPLIED WARRANTIES OF MERCHANTA-BILITY AND FITNESS FOR A PARTICULAR PURPOSE UNLESS OTHERWISE STATED HEREIN. LICENSOR AND LICENSOR'S AUTHORIZED REPRESENTATIVES DO NOT WARRANT THAT THE FUNCTIONS CONTAINED IN THE Software WILL MEET THE END-USER REQUIREMENTS OR THAT THE OPERATION OF THE Software WILL BE CORRECT. FURTHERMORE, LICENSOR AND LICENSOR'S AUTHORIZED REPRESEN-TATIVES DO NOT WARRANT OR MAKE ANY REPRESENTATIONS REGARDING THE USE OR THE RESULTS OF THE USE OF THE Software IN TERMS OF ITS CORRECTNESS, ACCURACY, RELIABILITY, OR OTHERWISE. NO ORAL OR WRITTEN INFORMATION OR ADVICE GIVEN BY LICENSOR AND LICENSOR'S AUTHORIZED REPRESENTATIVE SHALL CREATE A WARRANTY OR IN ANY WAY INCREASE THE SCOPE OF THIS WARRANTY. SHOULD THE Software PROVE DEFECTIVE IN YOUR TECHNOLOGY ENVIRONMENT, YOU ASSUME THE ENTIRE COST OF ALL NECESSARY SERVICING, REPAIR OR CORRECTION TO YOUR OWN TECHNOLOGY ENVIRONMENT.
10. Limitation of liability. TO THE MAXIMUM EXTENT PERMITTED BY LAW, LICENSOR AND LICENSOR'S AUTHORIZED REPRESENTATIVES SHALL NOT BE LIABLE FOR ANY INCIDENTAL OR CONSEQUENTIAL DAMAGES FOR BREACH OF ANY EXPRESS OR IMPLIED WARRANTY, BREACH OF CONTRACT, NEGLIGENCE, STRICT LIABILITY OR ANY OTHER LEGAL THEORY RELATED TO THE Software. SUCH DAMAGES INCLUDE, BUT ARE NOT LIMITED TO, LOSS OF PROFITS, LOSS OF REVENUE, LOSS OF DATA, LOSS OF USE OF THE PRODUCT OR ANY ASSOCIATED EQUIPMENT, DOWN TIME AND USER'S TIME, EVEN IF THE LICENSOR HAS BEEN ADVISED OF THE POSSIBILITY OF SUCH DAMAGES. IN ANY CASE, LICENSOR ENTIRE LIABILITY UNDER ANY PROVISION OF THIS AGREEMENT SHALL BE LIMITED TO THE AMOUNT ACTUALLY PAID IN RESPECT OF THE LICENSOR'S PRODUCTS PURCHASED BY THE END-USER PURSUANT TO A PURCHASE AGREEMENT.
11. Training, Maintenance and Support There is no entitlement to training, maintenance and support under this license unless otherwise specified in the Purchase Agreement or any other written agreement between the End-User and the Licensor. The End-User may provide the Licensor with details regarding any bug, defect or failure in the Software promptly and with no delay from such event; the End-User shall comply with the Licensor's request for information regarding bugs, defects or failures and furnish him with information, screenshots and try to reproduce such bugs, defects or failures upon Licensor's demand.
12. Expiration and Termination. The Licensor may terminate this Agreement for default by the End-User. This Agreement will also be automatically terminated upon the election of such by the Licensor or the official launch of the Software, whichever event comes first. Upon termination of this Agreement for any reason, the End-User shall promptly uninstall the Software on any UR's Products and Licensor's Products, computer, or server on which it has been installed, deliver to the Licensor all CDs, DVDs, magnetic tapes, cards, and other tangible items and materials embodying the Software, and return to the Licensor all copies

thereof or destroy such copies and warrant in writing that all copies thereof have been destroyed. In the event of termination of this Agreement, all obligations of the parties under this Agreement due for performance on the date of termination shall survive the termination, and the party terminating shall not be liable to the other party for any damages arising out of the termination.

13. Miscellaneous.
    a. This Agreement constitutes the entire understanding and agreement between the Licensor and the End-User and replaces any prior agreement relating to the same subject matter.
    b. This Agreement shall be governed and construed in accordance with the laws of the province of Quebec and the federal laws of Canada applicable therein. Any legal action or proceeding between the Licensor and the End-User for any purpose concerning this Agreement or the parties' obligations hereunder shall be brought exclusively in a court of competent jurisdiction sitting in the judicial district of Trois-Rivières, Quebec.
    c. The Licensor’s failure to insist upon or enforce strict performance of any provision of this Agreement shall not be construed as a waiver of any provision or right. Neither the course of conduct between the parties nor trade practice shall act to modify any provision of this Agreement.
    d. The Licensor may assign its rights and duties under this Agreement to any party at any time without notice to the End-User. The End-User may not assign this Agreement without the prior written consent of the Licensor.
    e. If any part of this Agreement is null, illegal or non-enforceable, this Agreement shall be interpreted as if this part was never part of this Agreement.
    f. The provisions of this Agreement are for the benefit of the Licensor and its officers, directors, employees, agents, licensors and suppliers. Each of these individuals or entities shall have the right to assert and enforce those provisions directly against the End-User on its own behalf. This Agreement is also for the benefit of, and binds, the End-User and its heirs, successors, legal representatives and permitted assigns.
    g. Any rights not expressly granted herein are reserved.
    h. The parties confirm that they have agreed that this Agreement and all related documents be drafted in English only. Les parties aux présentes confirment qu’elles ont accepté que la présente convention et tous les documents y afférents soient rédigés en anglais seulement.

4. Control

Info

Unless specified, all values in this section are in hexadecimal values.

4.1. Overview

The Robotiq Hand-E Gripper is controlled directly via Modbus RTU using a RS485 signal. It can also be controlled via an optional Robotiq Universal Controller using an industrial protocol (refer to the instruction manual of the Robotiq Universal controller). The programming of the Gripper can be done with the Teach Pendant of the robot or by offline programming. The communication method used to control the Hand-E Gripper does not change the control logic or register setups described in the following subsections.

Tip

Robotiq suggests using the Robotiq User Interface test software to explore the various features of the Gripper, like object detection and force control.

Since the Robotiq Hand-E Gripper has its own embedded controller, high-level commands, such as "Go to requested position" are used to control it.

Info

The operator can:
- Control force, speed and position of the Gripper fingers.
- Finger movement is always synchronized, movement is initiated via a single "Go to requested position" command.
- Parallel or encompassing grip is performed automatically.
- A built-in object detection feature is available; the user can be notified after an object is picked once the "Go to" command has been initiated. The feature also works for lost or dropped objects, and the user can be alerted if an object is dropped after being detected.
- Engage directional (open or close) auto-release for emergencies.

Control using registers

The Gripper has an internal memory that is shared with the robot controller. One part of the memory is for the robot output; **gripper functionalities**. The other part of the memory is for the robot input; **gripper status**. Two types of actions can then be performed by the robot controller :

1. Write in the **robot output** registers to activate **functionalities**;
2. Read in the **robot input** registers to get the **status** of the Gripper.

The **Gripper Register Mapping** section will map the different registers used to control the Gripper or to read its status while the**Robot Output Registers & Functionalities** section will detail the output (write) register functions, and the **Robot Input Registers & Status** section will detail the input (read) register status. The figure below is a representation of the memory and the control logic of the Gripper.

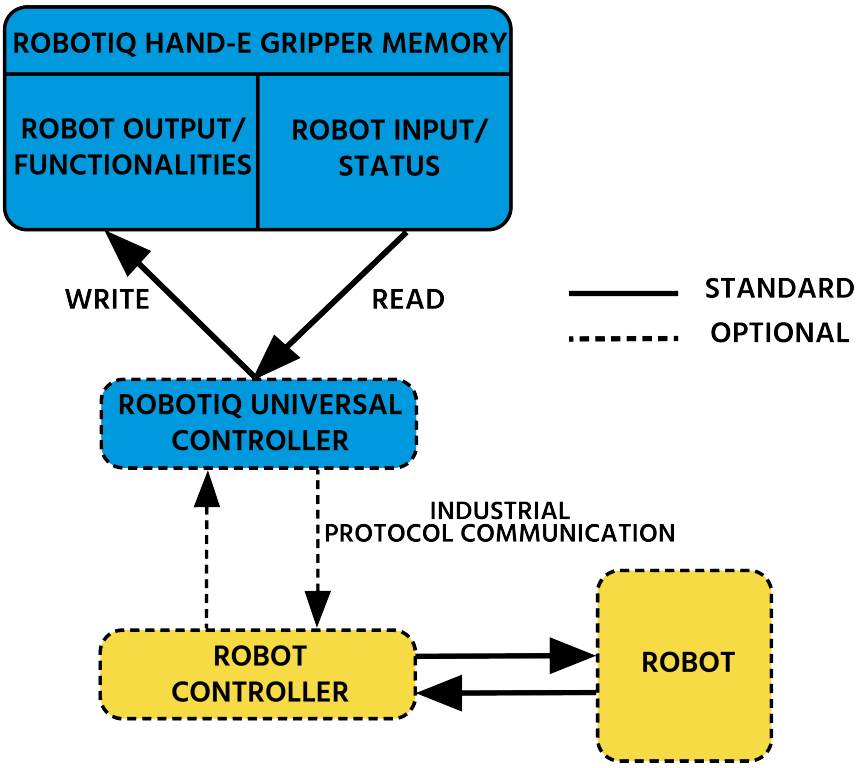

Fig. 4-1: Hand-E control logic overview

Control using Universal Robots packages

Robotiq provide *Universal Robots* packages to be used with *URCaps* (require controller CB3 or higher)

Please refer to the **Control** section for instructions on how to use the **Gripper** URCap; this method will provide you with a Gripper Toolbar to test and a Gripper node to program via the URCaps tab.

Please refer to the **Control over Universal Robots without URCaps** section on how to use without URcaps, this method will provide you with a similar Gripper Toolbar but the robot program will be built using subprograms and scripts.

4.2. Gripper Register Mapping

Register mapping

Caution

Byte numbering starts at zero and not at 1 for the functionalities and status registers.

Register	Robot Output / Functionalities	Robot Input / Status
Byte 0	ACTION REQUEST	GRIPPER STATUS
Byte 1	RESERVED	RESERVED
Byte 2	RESERVED	FAULT STATUS
Byte 3	POSITION REQUEST	POS REQUEST ECHO
Byte 4	SPEED	POSITION
Byte 5	FORCE	CURRENT
Byte 6 to 15	RESERVED	RESERVED

Table 4-1: Registers of the Hand-E Gripper.

4.3. Robot Output Registers & Functionalities

Register: **ACTION REQUEST**

Address: **Byte 0**

Bits	7	6	5	4	3	2	1	0
Symbols	Reserved		rARD	rATR	rGTO	Reserved		rACT

rACT

First action to be made prior to any other actions; the **rACT** bit will activate the Gripper. Clear the **rACT** bit to reset the Gripper and clear any fault status.

- 0x0 - Deactivate Gripper.
- 0x1 - Activate Gripper (must stay on after activation routine is completed).

> **Warning**
>
> When setting **rACT** (rACT ==1), the Gripper will begin movement to complete its activation feature.

> **Info**
>
> Power loss will set **rACT** (rACT == 1); the **rACT** bit must then be cleared (rACT == 0), then set again to allow operation of the Gripper.

> **Caution**
>
> The **rACT** bit must stay on afterwards for any other action to be performed.

rGTO

The "Go To" action moves the Gripper fingers to the requested position using the configuration defined by the other registers, **rGTO** will engage motion while bytes 3, 4 and 5 will determine aimed position, force and speed. The only motions performed without the **rGTO** bit are activation and automatic release routines.

- 0x0 - Stop.
- 0x1 - Go to requested position.

rATR

Automatic Release routine action slowly opens the Gripper fingers until all motion axes reach their mechanical limits. After all motions are completed, the Gripper sends a fault signal and needs to be reinitialized before any other motion is performed. The **rATR** bit overrides all other commands excluding the activation bit (**rACT**).

- 0x0 - Normal.
- 0x1 - Emergency auto-release.

> **Caution**

The automatic release is meant to disengage the Gripper after an emergency stop of the robot.
The automatic release is not intended to be used under normal operating conditions.
Automatic release requires the rACT to be cleared (rACT == 0) then set (rACT == 1).

rARD

Auto-release direction. When auto-releasing, **rARD** commands the direction of the movement. The **rARD** bit should be set prior to or at the same time as the **rATR** bit, as the motion direction is set when the auto-release is initiated.

- 0x0 - Closing auto-release
- 0x1 - Opening auto-release

Register: **GRIPPER OPTIONS**

Address: **Byte 1**

Bits	7	6	5	4	3	2	1	0
Symbol	Reserved							

Register: **GRIPPER OPTIONS 2**

Address: **Byte 2**

Bits	7	6	5	4	3	2	1	0
Symbol	Reserved							

Register: **POSITION REQUEST**

Address: **Byte 3**

Bits	7	6	5	4	3	2	1	0
Symbol	**rPR**							

This register is used to set the target position for the Gripper's fingers. The positions 0x00 and 0xFF correspond respectively to the fully opened and fully closed mechanical stops. For detailed finger trajectory, please refer to the **Specifications** section.

- 0x00 - Open position, with 50 mm opening
- 0xFF - Closed
- Opening / count: ≈0.2 mm for 50 mm stroke

Info

> The activation will allow the Gripper to adjust to any fingers/fingertips. No matter what is the size and/or shape of the fingers/fingertips, 0 will always be fully opened and 245 fully closed, with a quasi-linear relationship between the two values.

Register: **SPEED**

Address: **Byte 4**

Bits	7	6	5	4	3	2	1	0
Symbol	rSP							

This register is used to set the Gripper closing or opening speed in real time, however, **setting a speed will not initiate a motion**.

- 0x00 - Minimum speed
- 0xFF - Maximum speed
-

Register: **FORCE**

Address: **Byte 5**

Bits	7	6	5	4	3	2	1	0
Symbol	rFR							

The force setting defines the final gripping force for the Gripper. The force will fix the maximum current sent to the motor . If the current limit is exceeded, the fingers stop and trigger an object detection notification. Please refer to the **Picking Features** section for details on force control.

- 0x00 - Minimum force
- 0xFF - Maximum force

> **Info**
>
> Register bytes 6 to 15 are reserved and should be set to 0.

4.4. Robot Input Registers & Status

Register: **GRIPPER STATUS**

Address: **Byte 0**

Bits	7	6	5	4	3	2	1	0
Symbols	gOBJ		gSTA		gGTO	Reserved		gACT

gACT

Activation status, echo of the **rACT** bit (activation bit).

- 0x0 - Gripper reset.
- 0x1 - Gripper activation.

gGTO

Action status, echo of the **rGTO** bit (**go to** bit).

- 0x0 - Stopped (or performing activation / automatic release).
- 0x1 - Go to Position Request.

gSTA

Gripper status, returns the current status and motion of the Gripper fingers.

- 0x00 - Gripper is in reset (or automatic release) state. See Fault Status if Gripper is activated.
- 0x01 - Activation in progress.
- 0x02 - Not used.
- 0x03 - Activation is completed.

gOBJ

Object detection status, is a built-in feature that provides information on possible object pick-up. Ignore if **gGTO** == 0.

- 0x00 - Fingers are in motion towards requested position. No object detected.
- 0x01 - Fingers have stopped due to a contact while opening before requested position. Object detected opening.
- 0x02 - Fingers have stopped due to a contact while closing before requested position. Object detected closing.
- 0x03 - Fingers are at requested position. No object detected or object has been loss / dropped.

Caution

In some circumstances the object detection feature may not detect an object even if it is successfully grasped. For instance, picking up a thin object may be successful without the object detection status being triggered. In such applications, the "Fingers are at requested position" status of register gOBJ is sufficient to proceed to the next step of the routine.

Tip

> Checking for the correct position of the fingers (byte 4), **as well as** object detection (byte 0, bit 6 & 7) before proceeding to the next step of a routine is a more reliable method than object detection or finger position alone.

Register: **RESERVED**

Address: **Byte 1**

Bits	7	6	5	4	3	2	1	0
Symbol	Reserved							

Register: **FAULT STATUS**

Address: **Byte 2**

Bits	7	6	5	4	3	2	1	0
Symbols	kFLT				gFLT			

gFLT

Fault status returns general error messages that are useful for troubleshooting. Fault LED (red) is present on the Gripper chassis, LED can be blue, red or both and be solid or blinking.

- 0x00 - No fault (solid blue LED)
- Priority faults (solid blue LED)
  - 0x05 - Action delayed; the activation (re-activation) must be completed prior to perform the action.
  - 0x07 - The activation bit must be set prior to performing the action.

Minor faults (solid red LED)

- 0x08 - Maximum operating temperature exceeded (≥ 85 °C internally); let cool down (below 80 °C).
- 0x09 - No communication during at least 1 second.

Major faults (LED blinking red/blue) - Reset is required (rising edge on activation bit **(rACT)** needed).

- 0x0A - Under minimum operating voltage.
- 0x0B - Automatic release in progress.
- 0x0C - Internal fault, contact support@robotiq.com
- 0x0D - Activation fault, verify that no interference or other error occurred.
- 0x0E - Overcurrent triggered.
- 0x0F - Automatic release completed.

> **Info**
>
> While booting, status LED will be solid blue/red.

kFLT

please refer to your optional controller manual (input registers and status).

Register: **POSITION REQUEST ECHO**

Address: **Byte 3**

Bits	7	6	5	4	3	2	1	0
Symbol	gPR							

gPR

Echo of the requested position for the Gripper, value between 0x00 and 0xFF.

- 0x00 - Full opening.
- 0xFF - Full closing.

Register: **POSITION**

Address: **Byte 4**

Bits	7	6	5	4	3	2	1	0
Symbol	gPO							

gPO

Actual position of the Gripper obtained via the encoders, value between 0x00 and 0xFF.

- 0x00 - Fully opened.
- 0xFF - Fully closed.

Register: **CURRENT**

Adress: **Byte 5**

Bits	7	6	5	4	3	2	1	0
Symbol	gCU							

gCU

The current is read instantaneously from the motor drive, value between 0x00 and 0xFF, approximate current equivalent is 10 * value read in mA.

> **Tip**
>
> Built-in features like object detection and force control use the fingers' electrical current readings. The user does not need to create these features.

4.5. Picking Features

As stated in previous sections, object picking is done via a simple "Go To" command, **rGTO** bit calls for movement, while **rPR** byte is the aimed position, **rSP** and **rFR** will be the desired speed and force settings respectively. This section describes key features in object picking applications:

- Force control
- Re-grasp
- Object detection
- Object contact loss

4.5.1. Force control

The gripping force is controlled via the **rFR** byte (please refer to the **Robot Output Registers & Functionalities** section).The Gripper behavior will change according to the **rFR** force requested.

- **rFR** = 0 : Very fragile objects or deformable objects mode
  - Lowest force
  - Re-grasp feature is off
- 1 **rFR** 255 : Solid & firm objects
  - High torque mode
  - Re-grasp feature is on

Measured grip force for steel of specific hardness (Vickers)

Coming soon

Measured grip force for silicone of specific hardness (Durometer)

Coming soon

4.5.2. Re-Grasp

Re-grasp feature is a built-in feature meant to prevent object lost due to slipping or inaccurate initial grip. The Re-grasp feature will allow the Gripper to initiate a movement when an object is slipping or dropped. When Re-grasping, the Gripper will attempt to close until it reaches the position request (**rPR**).

- This feature is automatically set according to the force request **rFR**.

> **Info**
>
> Feature is off at force request rFR = 0, otherwise it is on.

- Re-grasp will keep the position setting:
  - Finger motion will stop when **rPR** position is reached, even if there is no object.
- Force and speed settings are not used, Re-grasp force and speed will automatically adjust to keep the object from being lost / dropped.

> **Info**
>
> While your initial settings for force and speed are not used for Re-grasp, they will never be eceeded to prevent damaging the part.

> **Caution**
>
> The rOBJ status is cleared when a motion is detected.

4.5.3. Object detection

When the Gripper grabs an object, the **gOBJ** status will allow you to know if contact with the object was successful. This is a built-in feature for adaptive grippers meant to be used by the robot controller (or PLC) commanding the overall application. The Object detection feature will change the gOBJ status and can be used inside your robot program.

As stated in the previous section:

gOBJ: Only valid if **gGTO** = 1.

- 0x00 - Fingers are in motion towards requested position. No object detected.
- 0x01 - Fingers have stopped due to a contact while opening before requested position. Object detected.
- 0x02 - Fingers have stopped due to a contact while closing before requested position. Object detected.
- 0x03 - Fingers are at requested position. No object detected or object has been lost / dropped.

Example of contact detected with an object:

1. Set position, speed and force at maximum (full closing):
    a. **rPR** == 0xFF, **rSP** == 0xFF, **rFR** ==0xFF,
2. Set "go to requested" will initiate movement :
    a. **rGTO** == 0x01
3. Then object detection status will be "in motion"
    a. **gOBJ** == 0x00
4. Until an object is picked, object detection status will then be "stopped due to contact while closing"
    a. **gOBJ** == 0x02
5. The user can now assume it is holding the payload, and proceed to the next step.

Example of contact lost with an object:

1. From the previous example, after an object is picked
    a. **gOBJ** == 0x02
2. If the gOBJ status displays 0x03 after it was 0x02, user can assume contact with the object has been lost.

4.5.4. Brake engagement

The Hand-E Gripper is equipped with a brake that engages at the end of each and every Gripper move, and thus disengages between each of these moves.

For instance, when fully closing on an object, the Gripper makes contact with the surface of the object and activates the brake before sending the object detection signal to the robot.

4.6. Control Logic Example

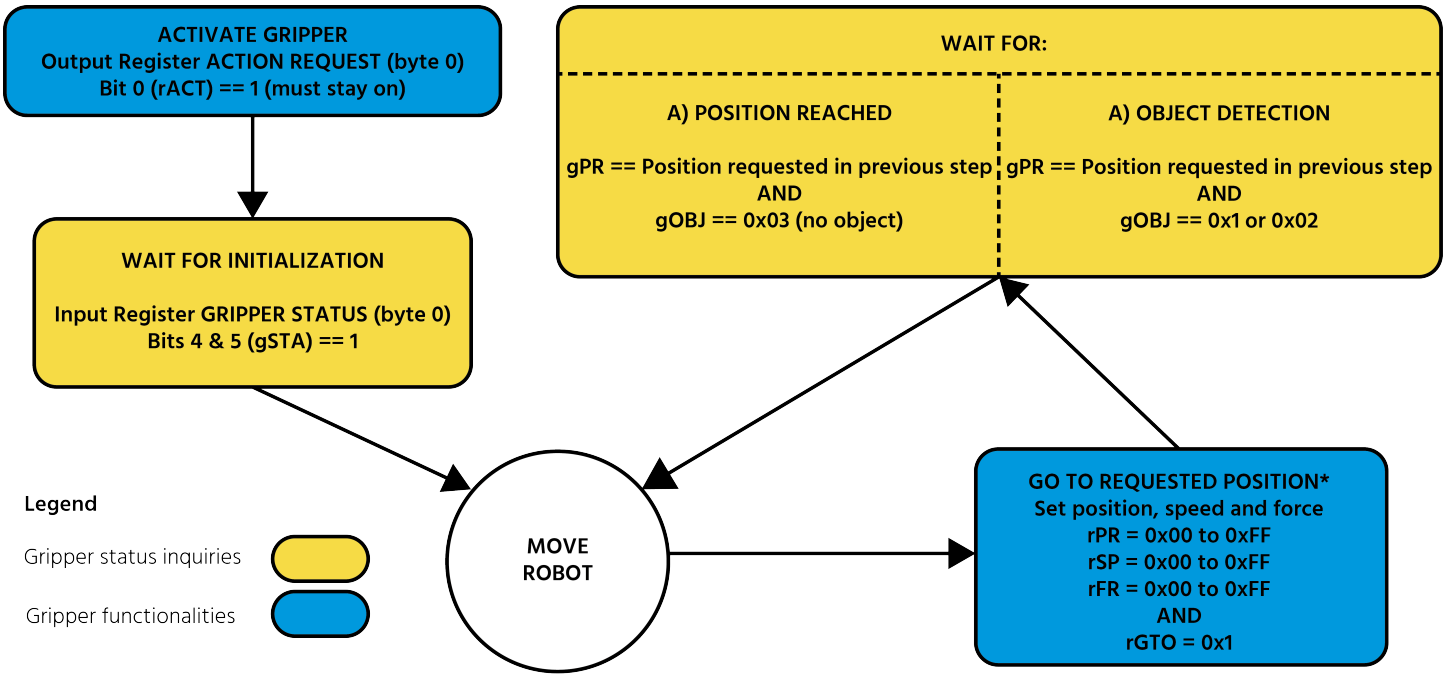

Go to requested position is used to open/close the Gripper until a contact with the object is detected, or the requested position is reached.

Fig. 4-2: Example of Gripper control logic with corresponding registers.

4.7. Modbus RTU Communication

The Gripper can be controlled by Modbus RTU directly with RS485 or over USB using the ACC-ADT-USB-RS485. This section is intended to provide guidelines for setting up a Modbus master that will adequately communicate with the Gripper.

For a general introduction to Modbus RTU and for details regarding the CRC algorithm, the reader is invited to read the Modbus over serial line specification and implementation guide available at: http://www.modbus.org/docs/Modbus_over_serial_line_V1_02.pdf.

For debugging purposes, the reader is also invited to download one of many free Modbus scanners such as the *CAS Modbus Scanner from Chipkin Automation Systems* available at: http://www.store.chipkin.com/products/tools/cas-modbus-scanner.

Info

Modbus RTU is a communication protocol based on a Big Endian byte order. Therefore, the 16-bit register addresses are transmitted with the most significant byte first. However, the data port is in the case of Robotiq products based on the Little Endian byte order. As such, the data parts of Modbus RTU messages are sent with the less significant byte first.

Tip

Modbus RTU specifications and details can be found at www.modbus.org.

4.7.1. Connection Setup

The following table describes the connection requirements for controlling the Gripper using the Modbus RTU protocol.

PROPRIETY	DEFAULT VALUE
Physical Interface	RS-485[1]
Baud Rate[2]	115,200 bps
Data Bits	8
Stop Bit[2]	1
Parity[2]	None
Supported Functions	Read Holding Registers (FC03) Read Input Registers (FC04) Preset Multiple Registers (FC16) Master read & write multiple registers (FC23)
Exception Responses	Not supported
Slave ID[2]	0x0009 (9)
Robot Output / Gripper Input First Register	0x03E8 (1000)
Robot Input / Gripper Output First Register	0x07D0 (2000)
Termination Resistor[2]	120 ohms

[1] Various converters are available in the **Spare Parts, Kits and Accessories** section.
[2] These parameters can be adjusted using the Robotiq User Interface.
Each register (word - 16 bits) of the Modbus RTU protocol is composed of **2** bytes (8 bits) from the Gripper. The first Gripper output Modbus register(0x07D0) is composed from the first **2** Robotiq Gripper bytes (byte 0 and byte 1).

Info

200 Hz is the maximum speed when commanding / reading from the Robotiq Gripper. It is therefore recommended to send commands with a minimum delay of 5 ms between them.

Info

120 Ohms termination resistor is already present on the converter and the Gripper. If multiple grippers are connected in parallel on the same RS485 cable, termination resistor must be set to OFF in communication parameters.

4.7.2. Read holding registers (FC03)

Function code 03 (FC03) is used for reading the status of the Gripper (robot input). Examples of such data are Gripper status, object status, finger position, etc.

Example of an FC03 read function:

This message asks for register 0x07D0 (2000) and register 0x07D1 (2001) which contains Gripper Status, Object Detection, Fault Status and Position Request Echo.

Request is: 09 03 07 D0 00 02 C5 CE

Bits	Description
09	SlaveID
03	Function Code 03 (Read Holding Registers)
07D0	Address of the first requested register
0002	Number of registers requested (2)
C5CE	Cyclic Redundancy Check (CRC)

Response is: 09 03 04 E0 00 00 00 44 33

Bits	Description
09	SlaveID
03	Function Code 03 (Read Holding Registers)
04	Number of data bytes to follow (2 registers x 2 bytes/register = 4 bytes)
E000	Content of register 07D0
0000	Content of register 07D1
4433	Cyclic Redundancy Check (CRC)

4.7.3. Read input registers (FC04)

Function code 04 (FC04) is used for requesting the status of the Gripper's analog input register. Examples of such data are Gripper status, object status, finger position, etc.

Example of an FC04 read function:

This message asks for register 0x07D0 (2000) and register 0x07D1 (2001) which contains Gripper Status, Object Detection, Fault Status and Position Request Echo.

Request is: 09 04 07 D0 00 02 70 0E

Bits	Description
09	SlaveID
04	Function Code 04 (Read Input Registers)
07D0	Address of the first requested register
0002	Number of registers requested (2)
700E	Cyclic Redundancy Check (CRC)

Response is: 09 04 04 E0 00 00 00 44 33

Bits	Description
09	SlaveID
04	Function Code 04 (Read Holding Registers)
04	Number of data bytes to follow (2 registers x 2 bytes/register = 4 bytes)
E000	Content of register 07D0
0000	Content of register 07D1
4584	Cyclic Redundancy Check (CRC)

4.7.4. Preset multiple registers (FC16)

Function code 06 (FC16) is used to activate functionalities of the Gripper (robot output). Examples of such data are action request, speed, force, etc.

Example of setting multiple registers FC16:

This message requests to set position request, speed and force of the Gripper by setting register 0x03E9 (1002) and 0x03EA.

Request is: 09 10 03 E9 00 02 04 60 E6 3C C8 EC 7C

Bits	Description
09	SlaveID
10	Function Code 16 (Preset Multiple Registers)
03E9	Address of the first register
0002	Number of registers written to
04	Number of data bytes to follow (2 registers x 2 bytes/register = 4 bytes)
60E6	Value written to register 0x03E9
3CC8	Value written to register 0x03EA
EC7C	Cyclic Redundancy Check (CRC)

Response is: 09 10 03 E9 00 02 91 30

Bits	Description
09	SlaveID
10	Function Code 16 (Preset Multiple Registers)
03E9	Address of the first register
0002	Number of written registers
9130	Cyclic Redundancy Check (CRC)

4.7.5. Master read & write multiple registers FC23

Function code 23 (FC23) is used for reading the status of the Gripper (robot input) and activating functionalities of the Gripper (robot output) simultaneously. Examples of such data are Gripper status, object status, finger position, etc. Action requests are speed, force, etc.

Example of reading and writing multiple registers FC23:

This message reads registers 0x07D0 (2000) and 0x07D1 (2001), which contains Gripper Status, Object Detection, Fault Status and Position Request Echo. It also sets the position request, speed and force of the Gripper by writing to registers 0x03E9 (1001) and 0x03EA (1002).

Request is: 09 17 07 D0 00 02 03 E9 00 02 04 00 E6 3C C8 2D 0C

Bits	Description
09	SlaveID
17	Function Code 23 (read and write multiple registers)
07D0	Address of the first requested register, **read**
0002	Number of registers requested (2), **read**
03E9	Address of the first register **written to**
0002	Number of registers **written** to (3)
04	Number of data bytes to follow (2 registers X 2 bytes/registers = 4 bytes)
00E6	Value written to register 0x03E9
3CC8	Value written to register 0x03EA
2D0C	Cyclic Redundancy Check (CRC)

Response is: 09 17 04 01 00 09 E6 F6 C1

Bits	Description
09	SlaveID
17	Function Code 23 (read and write multiple registers)
04	Number of data bytes to follow (2 registers x 2 bytes/register = 4 bytes)
1000	Content of register 07D0

Bits	Description
09E6	Content of register 07D1
F6C1	Cyclic Redundancy Check (CRC)

Note that the content of the response might change depending on the Gripper's status.

Info

The Gripper will execute the input command (i.e.: write), execute one cycle of motion, update the output, then return the Modbus response read.

4.7.6. Modbus RTU example

This section depicts the example from the **Control Logic Example** section, when programmed using the Modbus RTU protocol. The example is typical of a pick and place application. After activating the Gripper, the robot is moved to a pick-up location to grip an object. It moves again to a second location to release the gripped object.

Step 1: Activation Request (clear and set rACT)

Request is (clear rAct): 09 10 03 E8 00 03 06 00 00 00 00 00 00 73 30

Bits	Description
09	SlaveID
10	Function Code 16 (Preset Multiple Registers)
03E8	Address of the first register
0003	Number of registers written to
06	Number of data bytes to follow (3 registers x 2 bytes/register = 6 bytes)
0000	Value to write to register 0x03E9 (ACTION REQUEST = 0x01 and GRIPPER OPTIONS = 0x00): **rACT = 1 for "Activate Gripper"**
0000	Value written to register 0x03EA
0000	Value written to register 0x03EB
7330	Cyclic Redundancy Check (CRC)

Response is: 09 10 03 E8 00 03 01 30

Bits	Description
09	SlaveID
10	Function Code 16 (Preset Multiple Registers)
03E8	Address of the first register
0003	Number of written registers
0130	Cyclic Redundancy Check (CRC)

Request is (set rAct): 09 10 03 E8 00 03 06 01 00 00 00 00 00 72 E1

Bits	Description
09	SlaveID
10	Function Code 16 (Preset Multiple Registers)
03E8	Address of the first register
0003	Number of registers written to
06	Number of data bytes to follow (3 registers x 2 bytes/register = 6 bytes)
0100	Value to write to register 0x03E9 (ACTION REQUEST = 0x01 and GRIPPER OPTIONS = 0x00): **rACT = 1 for "Activate Gripper"**
0000	Value written to register 0x03EA
0000	Value written to register 0x03EB
72E1	Cyclic Redundancy Check (CRC)

Response is: 09 10 03 E8 00 03 01 30

Bits	Description
09	SlaveID
10	Function Code 16 (Preset Multiple Registers)
03E8	Address of the first register
0003	Number of written registers
0130	Cyclic Redundancy Check (CRC)

Step 2: Read Gripper status until the activation is completed

Request is: 09 03 07 D0 00 01 85 CF

Bits	Description
09	SlaveID
03	Function Code 03 (Read Holding Registers)
07D0	Address of the first requested register
0001	Number of registers requested (1)
85CF	Cyclic Redundancy Check (CRC)

Response (if the activation IS NOT completed): 09 03 02 11 00 55 D5

Bits	Description
09	SlaveID
03	Function Code 03 (Read Holding Registers)
02	Number of data bytes to follow (1 register x 2 bytes/register = 2 bytes)
1100	Content of register 07D0 (GRIPPER STATUS = 0x11, RESERVED = 0x00): gACT = 1 for "Gripper Activation**", gSTA = 1 for "Activation in progress"**
55D5	Cyclic Redundancy Check (CRC)

Response (if the activation IS completed): 09 03 02 31 00 4C 15

Bits	Description
09	SlaveID
03	Function Code 03 (Read Holding Registers)
02	Number of data bytes to follow (1 register x 2 bytes/register = 2 bytes)
3100	Content of register 07D0 (GRIPPER STATUS = 0x31, RESERVED = 0x00): gACT = 1 for "Gripper Activation**", gSTA = 3 for "Activation is completed"**
4C15	Cyclic Redundancy Check (CRC)

Step 3: Move the robot to the pick-up location

Step 4: Close the Gripper at full speed and full force

Request is: 09 10 03 E8 00 03 06 09 00 00 FF FF FF 42 29

Bits	Description
09	SlaveID
10	Function Code 16 (Preset Multiple Registers)
03E8	Address of the first register
0003	Number of registers written to
06	Number of data bytes to follow (3 registers x 2 bytes/register = 6 bytes)
0900	Value written to register 0x03E8 (ACTION REQUEST = 0x09 and GRIPPER OPTIONS = 0x00): **rACT = 1 for "Activate Gripper", rGTO = 1 for "Go to Requested Position"**
00FF	Value written to register 0x03E9 (GRIPPER OPTIONS 2 = 0x00 and POSITION REQUEST = 0xFF): **rPR = 255/255 for full closing of the Gripper**
FFFF	Value written to register 0x03EA (SPEED = 0xFF and FORCE = 0xFF): full speed and full force
4229	Cyclic Redundancy Check (CRC)

Response is: 09 10 03 E8 00 03 01 30

Bits	Description
09	SlaveID
10	Function Code 16 (Preset Multiple Registers)
03E8	Address of the first register
0003	Number of written registers
0130	Cyclic Redundancy Check (CRC)

Step 5: Read Gripper status until the grip is completed

Request is: 09 03 07 D0 00 03 04 0E

Bits	Description
09	SlaveID
03	Function Code 03 (Read Holding Registers)
07D0	Address of the first requested register
0003	Number of registers requested (3)
040E	Cyclic Redundancy Check (CRC)

Example of response if the grip **is not completed**: 09 03 06 39 00 00 FF 0E 0A F7 8B

Bits	Description
09	SlaveID
03	Function Code 03 (Read Holding Registers)
06	Number of data bytes to follow (3 registers x 2 bytes/register = 6 bytes)
3900	Content of register 07D0 (GRIPPER STATUS = 0x39, RESERVED = 0x00): gACT = 1 for "Gripper Activation", gGTO = 1 for "Go to Position Request" and **gOBJ = 0 for "Fingers are in motion"**
00FF	Content of register 07D1 (FAULT STATUS = 0x00, POSITION REQUEST ECHO = 0xFF): the position request echo tells that the command was well received and that the GRIPPER STATUS is valid.
0E0A	Content of register 07D2 (POSITION = 0x0E, FINGER CURRENT = 0x0A): the position is 14/255 and the motor current is 100mA (these values will change during motion)
F78B	Cyclic Redundancy Check (CRC)

Example of response if the grip **is completed**: 09 03 06 B9 00 00 FF BD 00 1D 7C

Bits	Description
09	SlaveID
03	Function Code 03 (Read Holding Registers)
06	Number of data bytes to follow (3 registers x 2 bytes/register = 6 bytes)
B900	Content of register 07D0 (GRIPPER STATUS = 0xB9, RESERVED = 0x00): gACT = 1 for "Gripper Activation", gGTO = 1 for "Go to Position Request" and **gOBJ = 2 for "Fingers have stopped due to a contact while closing"**
00FF	Content of register 07D1 (FAULT STATUS = 0x00, POSITION REQUEST ECHO = 0xFF): the position request echo tells that the command was well received and that the GRIPPER STATUS is valid.
BD00	Content of register 07D2 (POSITION = 0xBD, FINGER CURRENT = 0x00): the position is 189/255 (can be used to validate the size of the seized object)
1D7C	Cyclic Redundancy Check (CRC)

Step 6: Move the robot to the release location

Step 7: Open the Gripper at full speed and full force

Request is: 09 10 03 E8 00 03 06 09 00 00 00 FF FF 72 19

Bits	Description
09	SlaveID
10	Function Code 16 (Preset Multiple Registers)
03E8	Address of the first register
0003	Number of registers written to
06	Number of data bytes to follow (3 registers x 2 bytes/register = 6 bytes)
0900	Value written to register 0x03E8 (ACTION REQUEST = 0x09 and GRIPPER OPTIONS = 0x00): **rACT = 1 for "Activate Gripper", rGTO = 1 for "Go to Requested Position"**
0000	Value written to register 0x03E9 (GRIPPER OPTIONS 2 = 0x00 and POSITION REQUEST = 0x00): **rPR = 0/255 for full opening of the Gripper (partial opening would also be possible)**
FFFF	Value written to register 0x03EA (SPEED = 0xFF and FORCE = 0xFF): full speed and full force
7219	Cyclic Redundancy Check (CRC)

Response is: 09 10 03 E8 00 03 01 30

Bits	Description
09	SlaveID
10	Function Code 16 (Preset Multiple Registers)
03E8	Address of the first register
0003	Number of written registers
0130	Cyclic Redundancy Check (CRC)

Step 8: Read Gripper status until the opening is completed

Request is: 09 03 07 D0 00 03 04 0E

Bits	Description
09	SlaveID
03	Function Code 03 (Read Holding Registers)
07D0	Address of the first requested register
0003	Number of registers requested (3)
040E	Cyclic Redundancy Check (CRC)

Example of response if the opening **is not completed**: 09 03 06 39 00 00 00 BB 10 30 E0

Bits	Description
09	SlaveID
03	Function Code 03 (Read Holding Registers)
06	Number of data bytes to follow (3 registers x 2 bytes/register = 6 bytes)
3900	Content of register 07D0 (GRIPPER STATUS = 0x39, RESERVED = 0x00): gACT = 1 for "Gripper Activation", gGTO = 1 for "Go to Position Request" and **gOBJ = 0 for "Fingers are in motion"**
0000	Content of register 07D1 (FAULT STATUS = 0x00, POSITION REQUEST ECHO = 0x00): the position request echo tells that the command was well received and that the GRIPPER STATUS is valid.
BB10	Content of register 07D2 (POSITION = 0xBB, FINGER CURRENT = 0x10): the position is 187/255 and the motor current is 160mA (these values will change during motion)
30E0	Cyclic Redundancy Check (CRC)

Example of response if the opening **is completed**: 09 03 06 F9 00 00 00 0D 00 56 4C

Bits	Description
09	SlaveID
03	Function Code 03 (Read Holding Registers)
06	Number of data bytes to follow (3 registers x 2 bytes/register = 6 bytes)
F900	Content of register 07D0 (GRIPPER STATUS = 0xF9, RESERVED = 0x00): gACT = 1 for "Gripper Activation", gGTO = 1 for "Go to Position Request" and **gOBJ = 3 for "Fingers are at requested position"**
0000	Content of register 07D1 (FAULT STATUS = 0x00, POSITION REQUEST ECHO = 0x00): the position request echo tells that the command was well received and that the GRIPPER STATUS is valid.
0D00	Content of register 07D2 (POSITION = 0x0D, FINGER CURRENT = 0x00): the position is 13/255 (the fingers have reached their software limit)
564C	Cyclic Redundancy Check (CRC)

Step 9: Loop back to step 3 if other objects have to be gripped.

4.8. Control over Universal Robots with URCaps

The URCap package contains many features to program and control the Gripper. The package provides:

- Gripper toolbar: The Gripper toolbar is automatically installed with the URCaps package. It allows jogging and testing of the Gripper. It is a great tool to try grasps with the Gripper while programming.
- Gripper node: The URCaps package adds a Gripper node that is used to add a Gripper command. A node can make the Gripper move to a specific opening, grasp an object and modify the speed and force applied by the Gripper.

> **Caution**
>
> Starting from Gripper URCap version 1.0.2, the gripper activation script command (**rq_activate**() or **rq_activate_and_wait ()**) must be preceded by the reset command (**rq_reset()**). This will force the gripper's activation routine. Thus, if the gripper was already activated, it will activate again.

4.8.1. Gripper Dashboard

Overview

Single Gripper

Open or create a robot program

1. Go the **Installation** tab
2. Select **Gripper** in the left pane
3. Tap the **Dashboard** button
4. In no Gripper is found, tap the **Scan** button to detect any Gripper that might be connected to the robot
5. Tap the **Activate** button

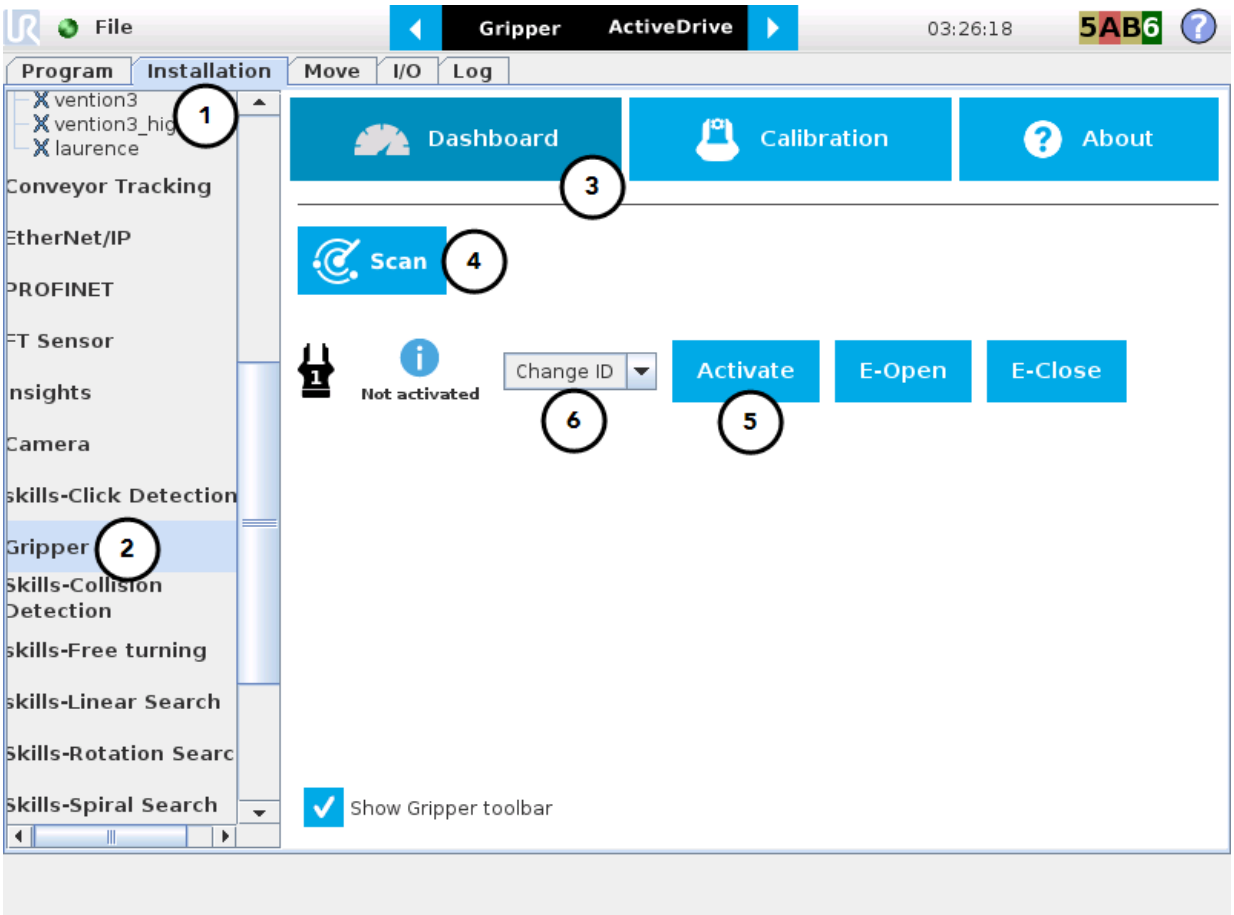

Fig. 4-3: Gripper Dashboard (steps highlighted)

6. If required, change the ID of the Gripper; ID numbers range from 1 to 4

> **Info**
>
> The default Gripper ID allocated to the first device connected is **1**.

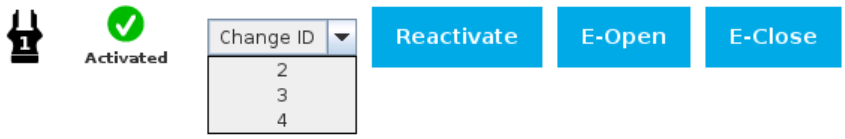

Fig. 4-4: Gripper ID modification in the Gripper Dashboard

Info

The **E-Open** and **E-Close** buttons allow the user to open and close the Gripper even if the latter is not activated. These emergency commands use very low speed and force settings.

Multiple Grippers

> **Info**
>
> The URCap allows the user to connect and control up to **4** Grippers at the same time.

> **Caution**
>
> If you wish to program using multiple grippers at the same time, connect them to the robot **one after the other**; each Gripper connection requiring its own **scan** and **activation** before going on to the next.

For each Gripper connected, follow steps 3 to 6 set out in the **Single Gripper** section.

Features

Icon	Functionality Name	Description
	Dashboard	After selecting Gripper in the left pane of the Installation tab, tap this button to access the Gripper Dashboard.
	Activate/Reactivate	The Activate and Reactivate buttons enables the corresponding Gripper.
	Not activated/Activated	Gripper status: One or the other of these icons is displayed next to the corresponding Gripper icon.
	Gripper	Label indicating the Gripper's ID, ranging from 1 to 4.
	Scan	Command allowing for a detection of connected Grippers. After tapping this button, the latter will display in the Gripper Dashboard.
	Change ID	Tap the arrow next to the textbox to expand a list of available Gripper IDs. Selecting an available number will allocate it to the corresponding Gripper.
	E-Open	Tapping this button sends an emergency open command to the corresponding Gripper, whether it is activated or not.
	E-Close	Tapping this button sends an emergency close command to the corresponding Gripper, whether it is activated or not.

4.8.2. Gripper Calibration menu and wizard

Depending on the fingers/fingertips used, the operator will calibrate the Gripper and measure the stroke by defining the fully open and fully closed positions.

Make sure the Gripper is activated.

1. Go to the **Installation** tab
2. Select **Gripper** in the left pane

> **Info**
>
> A gripper that has not been calibrated will display open and closed values in percentage.

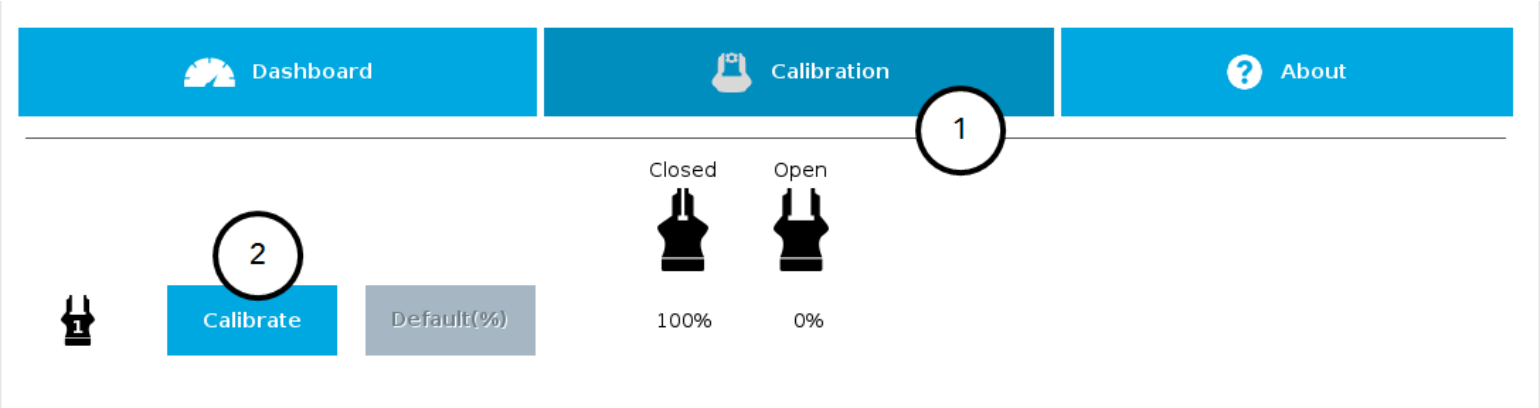

1. Tap the Calibration tab
2. Tap the Calibrate button corresponding to the Gripper you want to calibrate

Tapping the **Calibrate** button in the Gripper Calibration menu launches the **Calibration wizard**.

Follow the instructions on the screen of the teach pendant.

> **Tip**
>
> Depending on the PolyScope settings defined by the user, the units of measurement can either display according to the metric or imperial system.

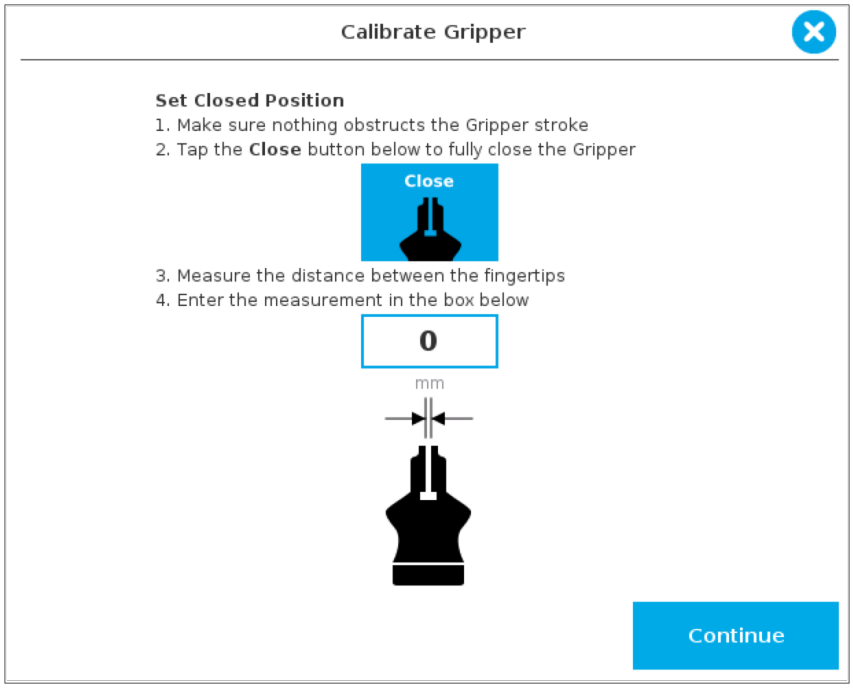

Fig. 4-5: First step of the calibration wizard

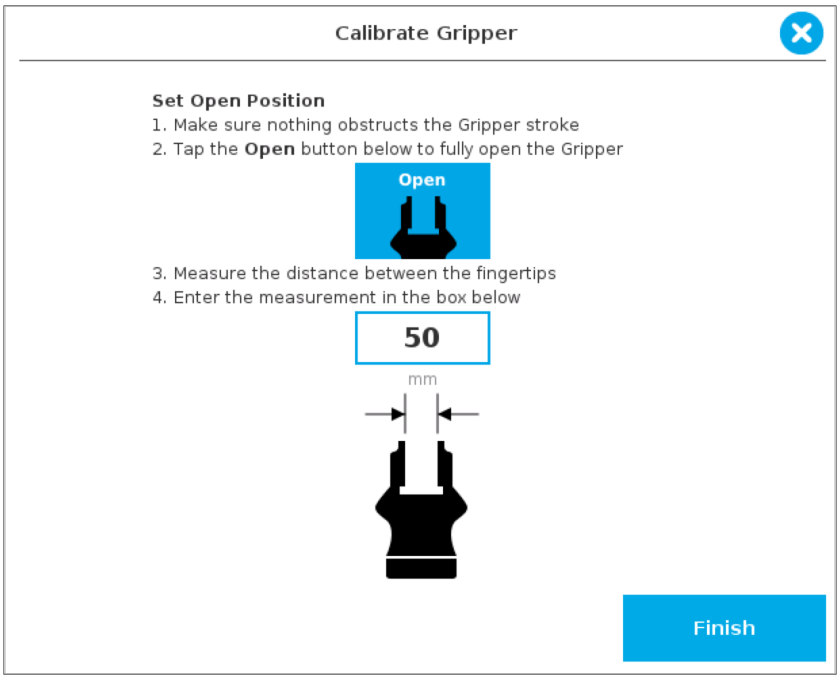

Fig. 4-6: Second step of the calibration wizard

Following their respective calibration, the Grippers will display their actual stroke, from the fully closed to the fully open position.

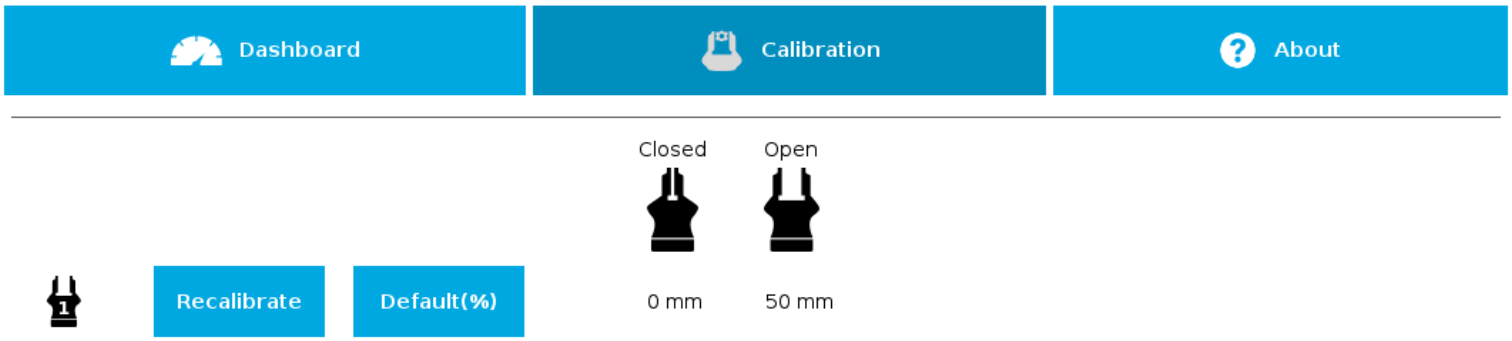

Fig. 4-7: Single Gripper, calibrated

Features

Icon	Functionality Name	Description
Calibration	Calibration	After selecting the Gripper in the left pane of the Installation tab, tap this button to access the Gripper Calibration menu.
Calibrate Recalibrate	Calibrate/Recalibrate	The Calibrate and Recalibrate buttons launch the Gripper Calibration wizard.
Default(%)	Default (%)	Following a calibration, tap this button to reset the calibration and return to the default percentage values. The button is greyed out if no calibration has been performed for the corresponding Gripper.
1	Gripper	Label indicating the Gripper's ID , ranging from 1 to 4.
Closed	Fully closed dimension table header	Visual aid above the fully closed dimensions in the Calibration menu.
Open	Fully open dimension table header	Visual aid above the fully open dimensions in the Calibration menu

Icon	Functionality Name	Description
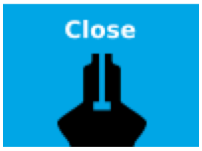	Close	Tap this button to close the Gripper in the Calibration wizard.
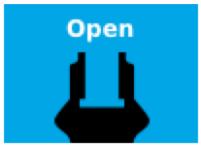	Open	Tap this button to open the Gripper in the Calibration wizard.
	Fully closed	Visual aid for entering the fully closed dimension in the Calibration wizard.
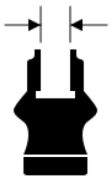	Fully open	Visual aid for entering the fully open dimension in the Calibration wizard.
	Continue	Tap this button at the end of the first step of the Calibration wizard in order to go to the next step.
	Finish	Tap this button at the the end of the Calibration wizard to complete the calibration process for the corresponding Gripper.

4.8.3. Gripper Toolbar

The Gripper Toolbar is generally used to test and jog the Gripper, meaning it has no effect on the programming of the robot.

> **Info**
>
> The Gripper URCap package contains the Gripper toolbar. Therefore, the toolbar is automatically installed with the URCap package. The Gripper toolbar can be installed and used without the URCap package (please refer to the **Gripper Toolbar** section for information on how to install the toolbar and the driver package without the URCap).

> **Info**
>
> The Gripper toolbar can be installed and used without the URCap package (please refer to the **Control over Universal Robots without URCaps** section for information on how to install the toolbar and the driver package without the URCap).

Overview

Prior to using the Gripper Toolbar, the user needs to go to the Gripper Dashboard and tick the **Show Gripper Toolbar**. Please refer to the **Gripper Dashboard** section

Right after the installation of the Gripper URCap, a collapsed Gripper toolbar will display at the top of the screen; please refer to the figure below.

Fig. 4-8: Gripper toolbar (collapsed)

An expanded Gripper Toolbar prior to the activation of the Gripper looks like the figure below:

Fig. 4-9: Gripper Toolbar before activation

> **Info**
>
> The **Emergency open** and **Emergency close** buttons allow the user to open and close the Gripper even if the latter is not activated.
> The emergency commands use very low speed and force settings.

- Tap the **Activate** button to enable the Gripper

Single Gripper

> **Caution**
>
> If the Gripper has not been calibrated at this point, the Open and Close values will remain in percentage. Please refer to the **Gripper Calibration menu and wizard** section for instructions.

Once the Gripper is activated, the toolbar can be expanded and used to test and jog the Gripper

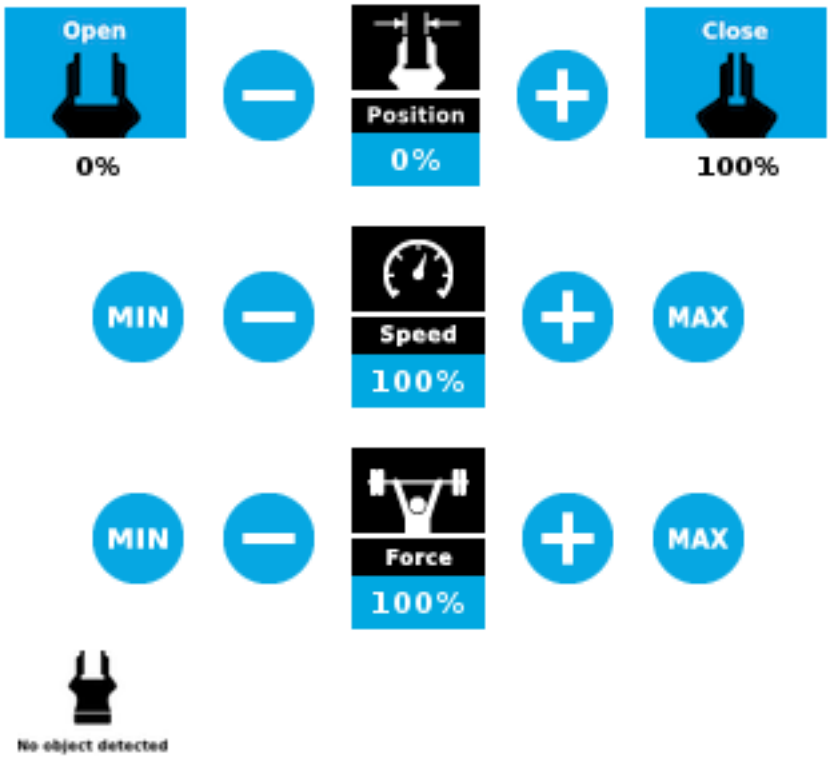

Fig. 4-10: Gripper toolbar after activation

Multiple Grippers

If multiple Grippers are used, check one or several Grippers and test their settings and features.

Tip

The first Gripper selected is the "master", meaning that its settings will be copied over to the others when they are selected. In order to modify each Gripper's settings individually, select a Gripper, edit it, uncheck its box and carry on to the next Gripper.

Info

For consistency, selecting multiple Grippers at the same time displays the open and close values in percentage since their stroke might be different.

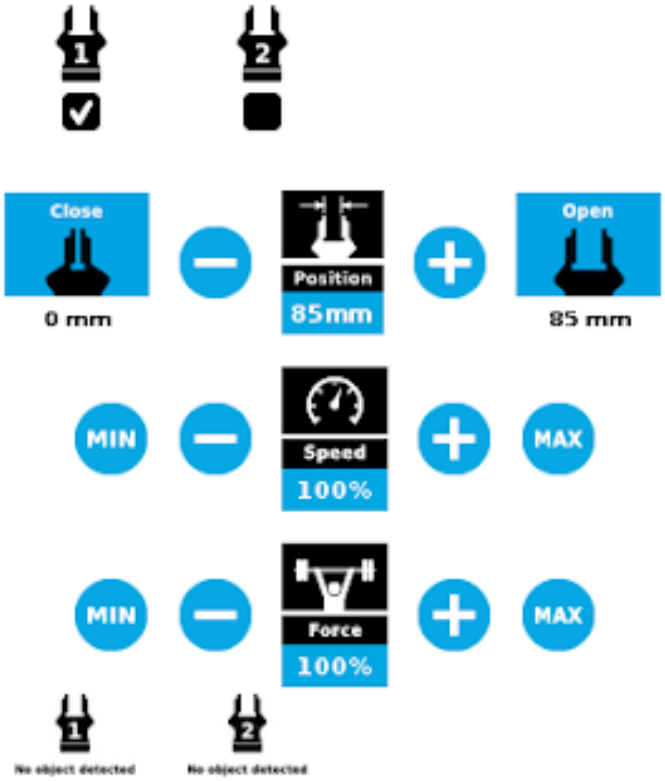

Fig. 4-11: Gripper toolbar (expanded, multiple Grippers)

Features

Gripper activation

Icon	Functionality Name	Description
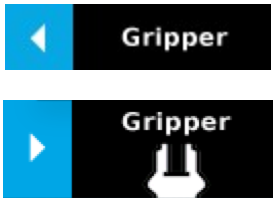	Gripper toolbar	Tap to toggle between the expanded and collapsed Gripper toolbar. When greyed out, the functionality is not available.
	Activate	Tap to activate the Gripper. The Gripper will fully open and close to set the zero of the position value.
	Emergency open	Slowly moves the Gripper to its fully closed position.
	Emergency close	Slowly moves the Gripper to its fully open position.

Gripper operation window

Primary Icon	Functionality Name	Description
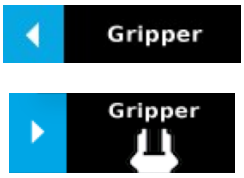	Gripper toolbar	Tap to toggle between expanded and collapsed Gripper toolbar. When greyed out, the functionality is not available.
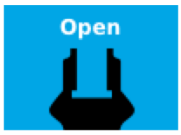	Open	Tap to fully open the Gripper.
	Close	Tap to fully close the Gripper.
	Requested position	Shows the actual position of the Gripper according to the system of units defined in PolyScope (imperial vs. metric). If the Gripper is not calibrated, the values will display in percentage.
	Requested speed	Shows the actual speed set of the Gripper. • 0% = minimum speed • 100% = maximum speed
	Requested force	Shows the actual force set of the Gripper: • 0% : minimum force, regrasp feature disabled • 1% : minimum force, with regrasp feature enabled • 100% : maximum force, with regrasp feature enabled
	Plus	Tap to increase the corresponding parameter.
	Minus	Tap to decrease the corresponding parameter.
	No object detected	Icon shown when no object is detected during a grasp.
	Object detected	The icon shows a green checkmark when an object is detected during a grasp.

Show/hide Gripper Toolbar

It is possible to toggle between a shown and a hidden Gripper Toolbar.

1. Create or load a robot program
2. Tap the **Installation** tab
3. Select **Gripper** in the left pane
4. Tap the **Dashboard** submenu
5. Check/Uncheck the box in the lower left corner

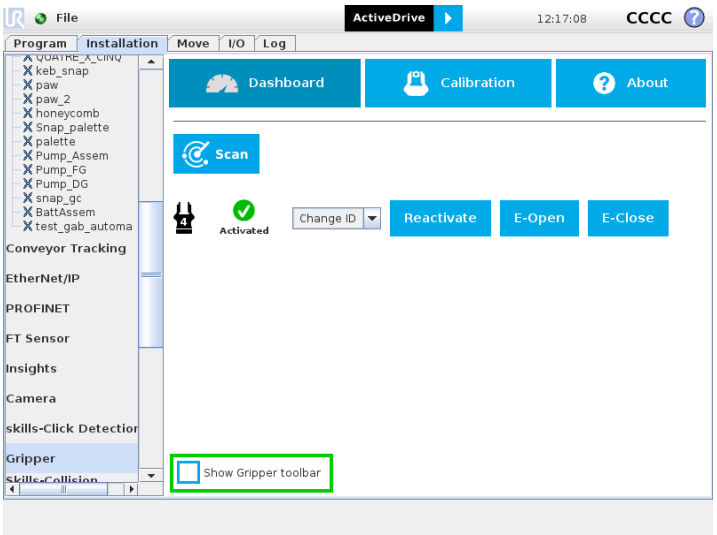

4.8.4. Gripper Node

To add and edit a Gripper node inside your robot program, follow the steps below:

1. Tap **Program Robot**.
2. Open an empty program or load one.
3. Go the **Structure** tab and tap the **URCaps** submenu.
4. **Tap the Gripper button.**
5. Go to the **Command** tab to edit the **Gripper** node inserted.
6. Tap the **Edit** action button to edit the node's parameters.

> **Info**
>
> The Gripper needs to be activated before it can receive a command. To do so, use the rq_activate_and_wait() function script at the beginning of the program or activate with the Gripper toolbar. Starting from Gripper URCap version 1.0.2, the Gripper activation script command (**rq_activate()** or **rq_activate_and_wait()**) must be preceded by the reset command (**rq_reset ()**). This will force the Gripper's activation routine. Thus, if the Gripper was already activated, it will activate again.

Command window

The Command window shows the requested action parameters for the Gripper node. Depending on the position, speed and force parameters, warning messages may display.

To edit the Gripper node, tap **Edit action** (please refer to the **Edit action screen** section for more details).

Gripper 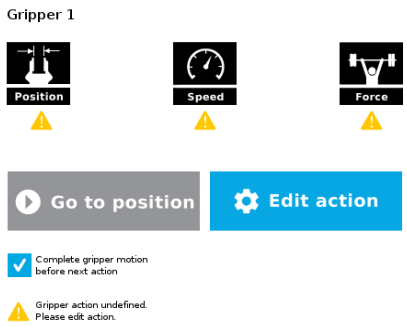 	When the node is not defined, the Command window shows warning messages. Tap **Edit action** to modify the Gripper's action. **Caution** Tap the **Go to position** button prior to editing the action. Whereas the command window displays the command that the Gripper should execute in this particular node, the Edit action screen displays the current Gripper position.
Gripper 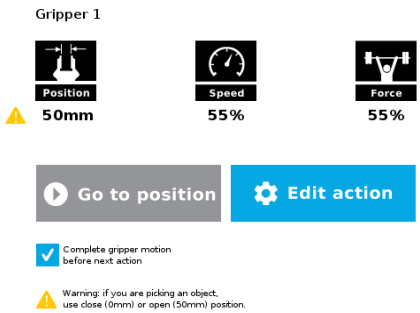 	When the node requests the Gripper to close/open, the Command window warns that a partial opening/closing should not be performed for picking an object. • For positioning and partial movement of the hand, moving to a specific position (between the fully open and fully close positions) is suitable. • To pick an object, use the close (or open) actions along with the object detection feature (please refer to the **Edit action screen** section). **Info** When the action is set for multiple Grippers, the header lists the selected Grippers (e.g. Grippers 1,2,3,4)

Gripper 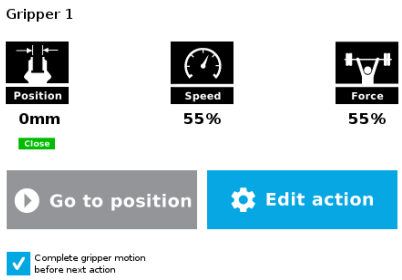 	When the Gripper action is set to **close**, a green "Close" icon appears. When the Gripper action is set to **open**, a green "Open" icon appears.

Features

Icon	Functionality Name	Description
	Requested position	Shows the position requested for the current Gripper node. Read only.
	Requested speed	Shows the speed requested for the selected Gripper node. Read only.
	Requested force	Shows the force requested for the selected Gripper node. Read only.
	Go to position	Sends all node parameters (position, force, speed) to the Gripper. Note: This button is disabled (grey) when the Gripper is already at the node position or when the Gripper is not powered/activated.
	Edit action	Opens the Edit action screen, where you can edit the Gripper's action parameters.
	Complete motion	Selected by default. Selected: The Gripper completes its motion before executing the next action on the PolyScope program tree. This is slower but safer.
	Do not complete motion	Selected by default. Unselected: As soon as the Gripper starts moving, PolyScope will execute the next action on the program tree. This allows you to move the Gripper and robot at the same time.
	Warning message section	
	Gripper not activated	"Warning, the Gripper is not powered or not activated. The Gripper will not move." Make sure that the Gripper is installed correctly and powered. You need to activate it using the Gripper toolbar before running Gripper commands.
	Gripper action undefined	"Gripper action undefined! Please edit action." When creating a new node, all action parameters are undefined. Tap the edit action button to define parameters.

Icon	Functionality Name	Description
⚠	Object picking warning	“Warning, if you are picking an object, use close (100%) or open (0%) position.” It is highly recommended to only use 0% or 100% position when trying to pick an object.
Gripper	Node name	Node name is automatically set to: • Gripper Open, when position = 0% or fully open value as defined in the Calibration wizard • Gripper Close, when position = 100% or fully closed value as defined in the Calibration wizard. • Gripper Move x%/mm/in, when position is between the fully open and fully closed values.
Open	Open request	When position requested is 0%, or the fully opened value defined in the Calibration wizard.
Close	Close request	When position request is 100%.

Edit action screen

Tap **Edit action** from the Command window and use the Edit action screen to edit the Gripper's parameters and adjust its position, speed and force. In normal usage conditions, the Gripper will move as soon as you change the position setting. The Gripper will not move if it is not properly powered, connected and activated.

> **Caution**
>
> The Gripper needs to be activated before it can receive a command. To do so, use the rq_activate_and_wait() function script at the beginning of the program or activate with the Gripper toolbar. Starting from Gripper URCap version 1.0.2, the gripper activation script command (**rq_activate()** or **rq_activate_and_wait()**) must be preceded by the reset command (**rq_reset ()**). This will force the gripper's activation routine. Thus, if the gripper was already activated, it will activate again.

Single Gripper

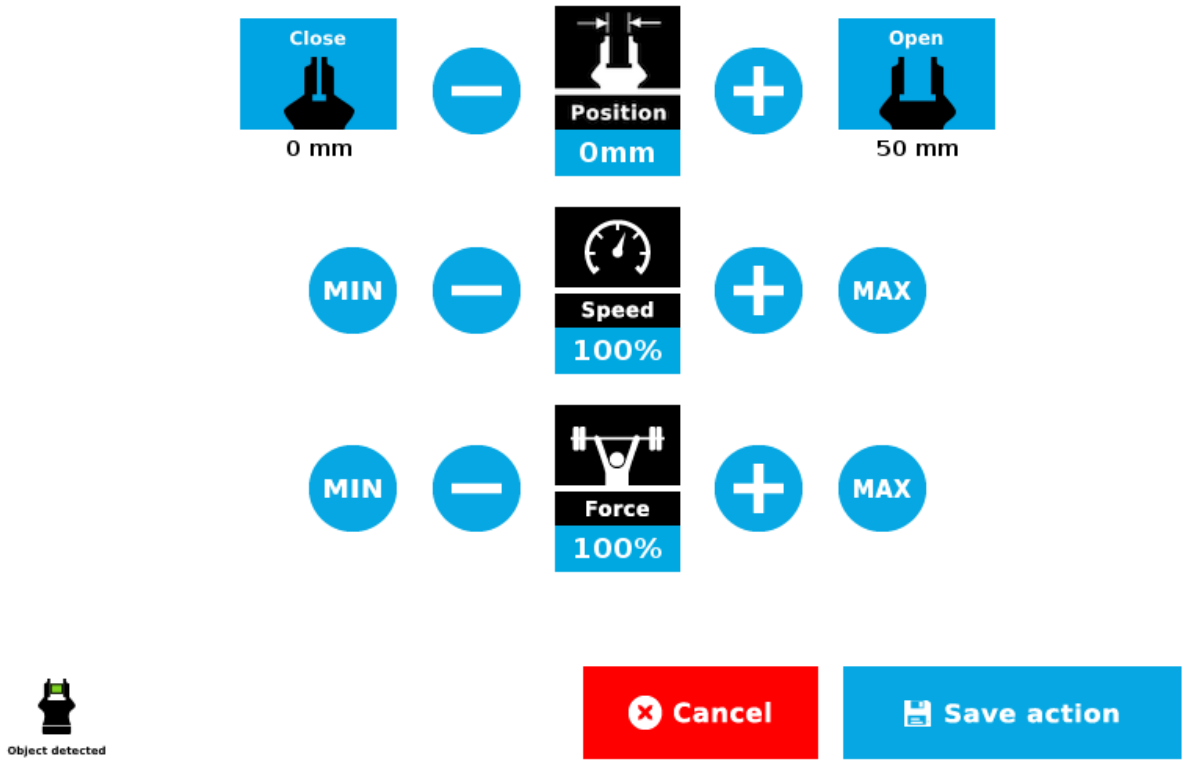

Fig. 4-12: Edit action screen

Multiple Grippers

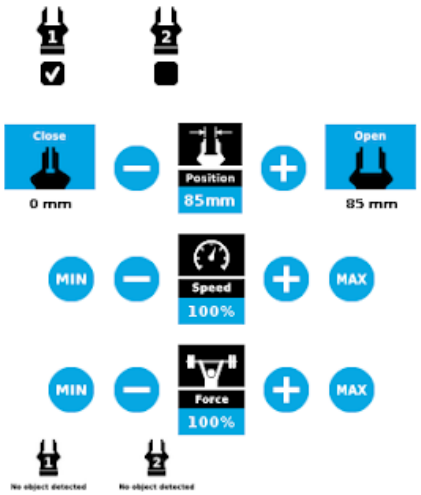

- When selecting one gripper, all buttons are available. The action will apply to the selected gripper.
- When jogging the position, the selected gripper will move automatically.
- It is possible to jog the position (%).

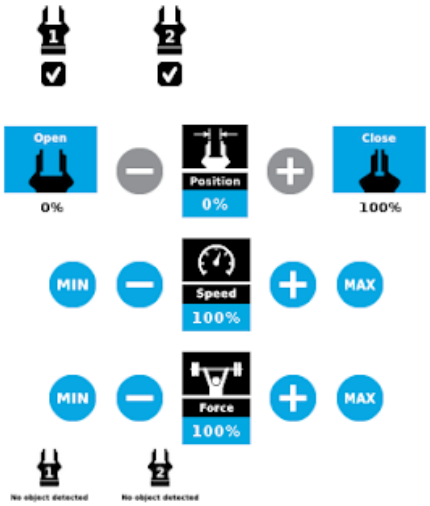

- When selecting two or more grippers, it is not possible to jog the position.
- To jog the position, select only one gripper, jog the position and then select all grippers. The second gripper will move to the requested position.

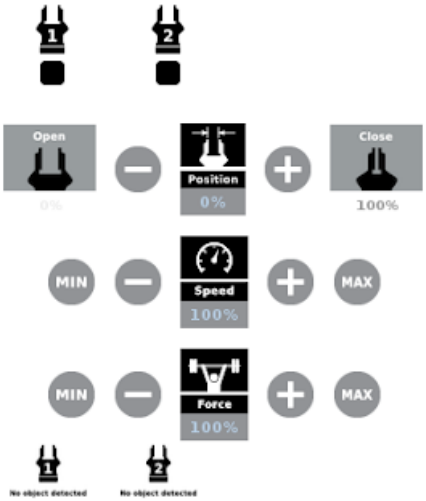

- When no grippers are selected, the action cannot be edited.

Features

Primary Icon	Functionality Name	Description
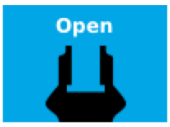	Open	Tap to fully open the Gripper. Use this when you want to grip an object (internal grip), for example.
	Close	Tap to fully close the Gripper. Use this when you want to grip an object (external grip), for example.
	Requested position	Shows the position request for the selected Gripper node.
	Requested speed	Shows the speed requested for the selected Gripper node. Use the Plus and Minus icons to modify.
	Requested force	Shows the force requested for the selected Gripper node. Use the Plus and Minus icons to modify.
	Plus	Tap to increase the corresponding parameter.
	Minus	Tap to decrease the corresponding parameter.
	Cancel	Cancels modifications and brings back the Gripper node command screen.
	Save action	Saves settings into the selected Gripper node and brings back the Gripper node command screen. Note: This functionality is not available (grey) when the Gripper has the same action parameters as the selected Gripper node.
	No object detected	Icon shown when no object is detected during a grasp.
	Object detected	Icon shows a green checkmark when an object is detected during a grasp.

Warning

If the Gripper is powered and activated, it will move as soon as a change to the parameter is made (position, speed, force).

Tip

Change speed and force when grasping fragile objects or other specific parts. In all other cases, it is recommended to use maximum speed and force.

Grip Check node

In order to add and edit a Grip Check node:

1. Open a robot program or create one
2. Go to the **Installation** tab
3. Tap the **URCaps** submenu
4. Select **Grip Check**

TheGrip Check node is pre-packaged as an If statement that prompts the user to select between if the object ***is*** detected and if the object ***is not*** detected.

Selecting the former option allows the user to check a box and choose whether or not the grasp should be validated according to the object's dimension (in percentage if the Gripper is not calibrated, or in mm/in if the Gripper is calibrated–depending on the PolyScope configuration).

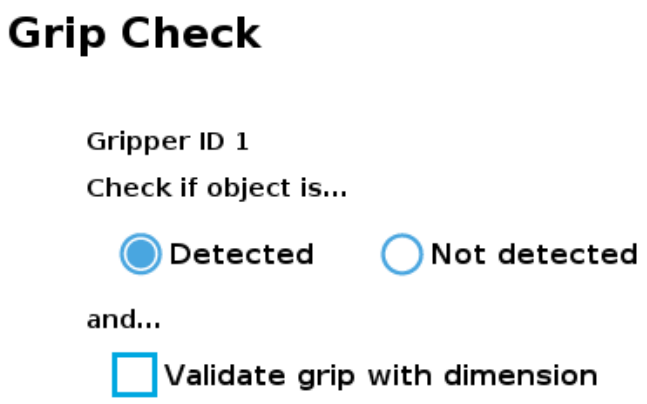

Fig. 4-13: Grip Check node interface

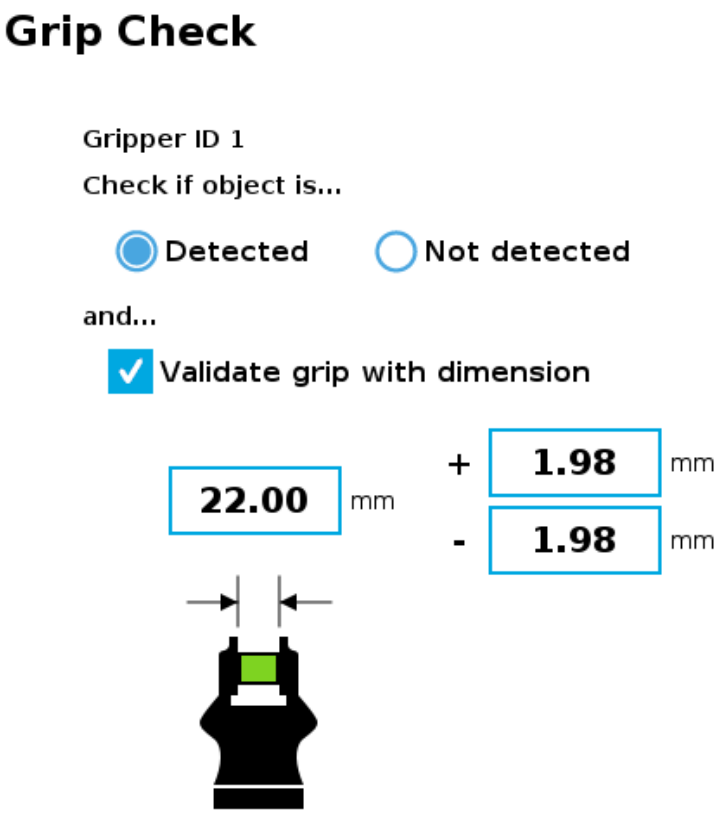

Fig. 4-14: Grip Check node interface with dimension validation

Given that the Grip Check node is an If statement, tapping the actual node in the Command tab brings up the option to add an **Else** instruction to the program tree.

About

In this window, the user can access information such as the Gripper's hardware, software and firmware versions, the number of cycles completed by the device and more.

1. Create or load a robot program
2. Tap the **Installation** tab
3. Select **Gripper** in the left pane
4. Tap the **About** submenu

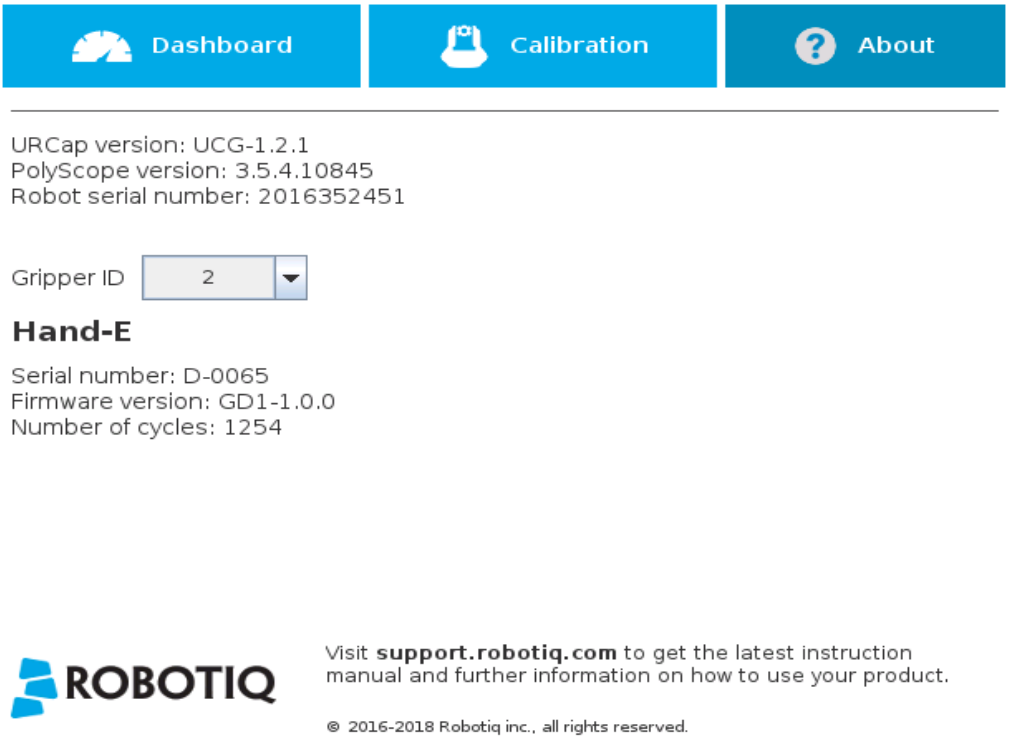

If the Gripper version is obsolete, a warning message will display and an Upgrade firmware button will prompt the user to upgrade the firmware to the latest available version.

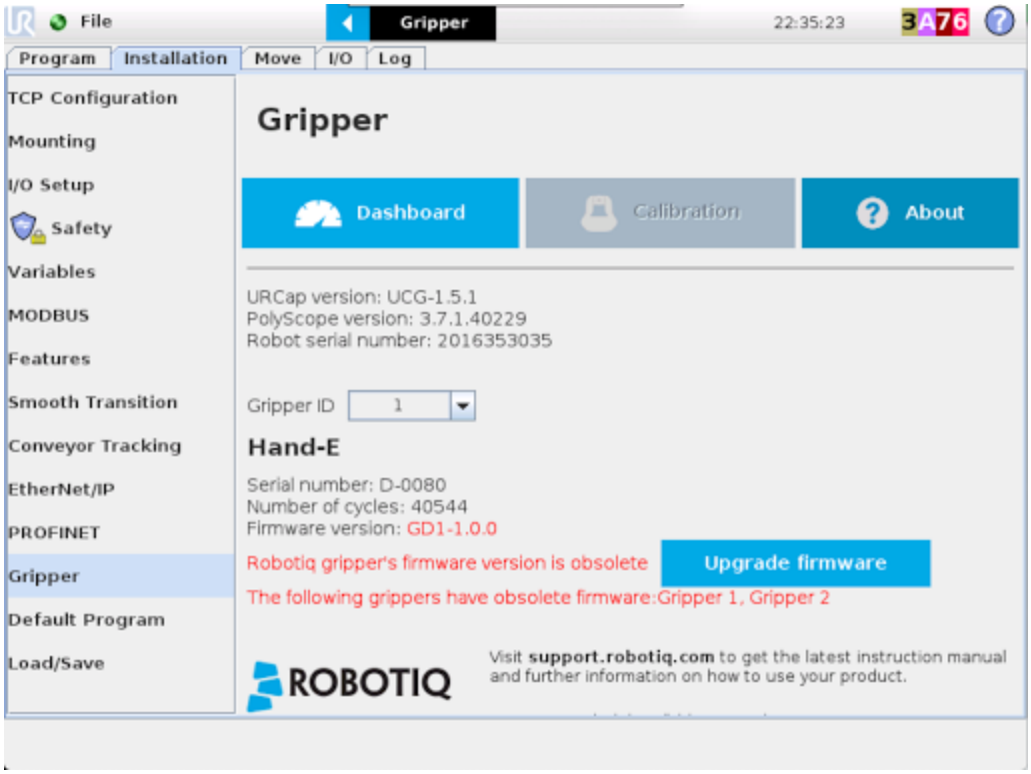

Fig. 4-15: Firmware Upgrade Warning Message in PolyScope for CB-Series

Error messages overview

If a program is running without the Gripper being activated, the program will stop at the execution of a Gripper node and the following message will be displayed in a popup. Tap **Stop Program** and activate the gripper with the toolbar to continue or add an activation command in the program (please refer to the **Advanced Gripper Functions** section).

> **Caution**
>
> Starting from Gripper URCap version 1.0.2, the Gripper activation command (**rq_activate()** or **rq_activate_and_wait()**) must be preceded by the reset command (**rq_reset()**). This will force the gripper's activation routine. Thus, if the gripper was already activated, it will activate again.

Gripper Program Template

With the URCap package installation, a program template will automatically be installed in the program folder of PolyScope. It contains comments and pop up windows that explain Gripper nodes and advanced functions.

Load and open the gripper_tutorial.urp program located in the root program folder. Make sure the Gripper is well connected to the UR controller. Run the program. You will see pop up windows with comments on the Gripper nodes and advanced functions.

> **Tip**

Use the gripper_tutorial.urp to learn how to program the Gripper using nodes and advanced functions. You can copy the tutorial and start a new program based on it.

Advanced Gripper Functions

The use of Gripper URCap nodes allows to move the Gripper and modify its speed and force. However, some advanced functions are only available through UR Script commands.

> **Info**
>
> The Gripper needs to be activated before it can receive a command. To do so, use the **rq_activate_and_wait()** function script at the beginning of the program or activate with the Gripper toolbar.

The functions listed below can be called using subprograms in PolyScope or with a script. Functions with the suffix **_and_wait** will wait for the Gripper to complete its operation before going to the next step.

Single Gripper

Name	Description
rq_activate()	Sends the Gripper activation command. If it is already activated, nothing happens. Note that the Gripper must be activated to complete any other operation. Program execution continues before the end of activation.
rq_activate_and_wait()	Sends the Gripper activation command. If it is already activated, nothing happens. Note that the Gripper must be activated to complete any other operation. Program execution waits for the activation.
rq_auto_release_close_and_wait()	Slowly moves the Gripper to its maximum closed position. The Gripper must be activated after this command. Meant for emergency procedures.
rq_auto_release_open_and_wait()	Slowly moves the Gripper to its maximum opened position. The Gripper must be activated after this command. Meant for emergency procedures.
rq_close()	Moves the Gripper its fully closed position.
rq_close_and_wait()	Moves the Gripper to its fully closed position and waits until the motion is completed to execute the next command.
rq_current_pos()	Returns the current position of the fingers, from 0 to 255. Can be used to verify that the pick is successful, by comparing the finger position when the pick was taught with the similar-sized object.
rq_current_pos_norm()	Returns the current position of the fingers, normalized from 0% to 100%. Can be used to verify that the pick is successful, by comparing the finger position when the pick was taught with the similar-sized object.
rq_current_pos_mm()	Returns the current position of the fingers in millimeters, considering that the PolyScope configuration has been set to use the metric system as measurement system. Can be used to verify that the pick is successful, by comparing the finger position when the pick was taught with the similar-sized object.
rq_current_pos_in()	Returns the current position of the fingers in inches, considering that the PolyScope configuration has been set to use the imperial system as measurement system. Can be used to verify that the pick is successful, by comparing the finger position when the pick was taught with the similar-sized object.
rq_get_gripper_max_cur(current_mA, gripperId)	Returns the maximum supply current value of the appropriate Gripper in mA.

Name	Description
rq_go_to()	Sets the **Go To** bit to 1.
rq_is_gripper_activated()	Sets global variable **rq_gripper_act** to 1 if the Gripper is activated and returns True. Otherwise sets the variable to 0 and returns False.
rq_is_motion_complete()	Returns True if the motion of the Gripper is complete and False otherwise. Can be useful to synchronize a program after a Gripper node is run without the option “Complete Gripper motion before next action”.
rq_is_object_detected()	Returns True if the Gripper motion has stopped due to an object. Returns False if Gripper motion was not impeded by an object. Useful for verifying that an object has been picked correctly before going to the next step. Note: this function is not reliable for very small objects. Refer to the user manual for more details.
rq_move_and_wait("position")	Moves the Gripper to the position defined by the argument and waits until the motion is completed.
rq_move("position")	Moves the Gripper to the position defined by the argument.
rq_move_and_wait_norm ("position")	Moves the Gripper to the position defined by the argument, normalized from 0% to 100%. Waits until the motion is completed.
rq_move_mm()	Moves the Gripper to the position defined by the argument.
rq_move_and_wait_mm()	Moves the Gripper to the position defined by the argument.
rq_move_inches()	Moves the Gripper to the position defined by the argument.
rq_move_and_wait_inches()	Moves the Gripper to the position defined by the argument.
rq_move_norm("position")	Moves the Gripper to the position defined by the argument, normalized from 0% to 100%.
rq_open()	Moves the Gripper to its fully opened position.
rq_open_and_wait()	Moves the Gripper to its fully opened position and waits until the motion is completed.
rq_print_gripper_driver_state()	Prints the driver's state to the UR log window.
rq_print_gripper_driver_version()	Prints the driver version to the UR log window.
rq_print_gripper_fault_code()	Prints the Gripper's fault code in the UR log window.
rq_print_gripper_firmware_version()	Prints the Gripper's firmware version to the UR log window.
rq_print_gripper_num_cycles()	Prints the Gripper's number of cycles in the UR log window.
rq_print_gripper_serial number()	Prints the Gripper's serial number in the UR log window.
rq_reset()	Resets the Gripper's activation status. Use after an autorelease before activating the Gripper.
rq_set_force("force")	Sets the Gripper's force defined by the argument, from 0 to 255.
rq_set_force_norm("force")	Sets the Gripper's force defined by the argument, normalized from 0% to 100%.
rq_set_gripper_max_cur(current_ mA, gripperId)	Sets the Gripper's maximum supply current in mA
rq_set_speed("speed")	Sets the Gripper's speed defined by the argument, from 0 to 255.

Name	Description
rq_set_speed_norm("speed")	Sets the Gripper's speed defined by the argument, normalized from 0% to 100%.
rq_stop()	Stops the Gripper's motion. The **Go To** bit is set to 0.

Multiple Grippers

Here is an example of how to use the script commands with more than one gripper.

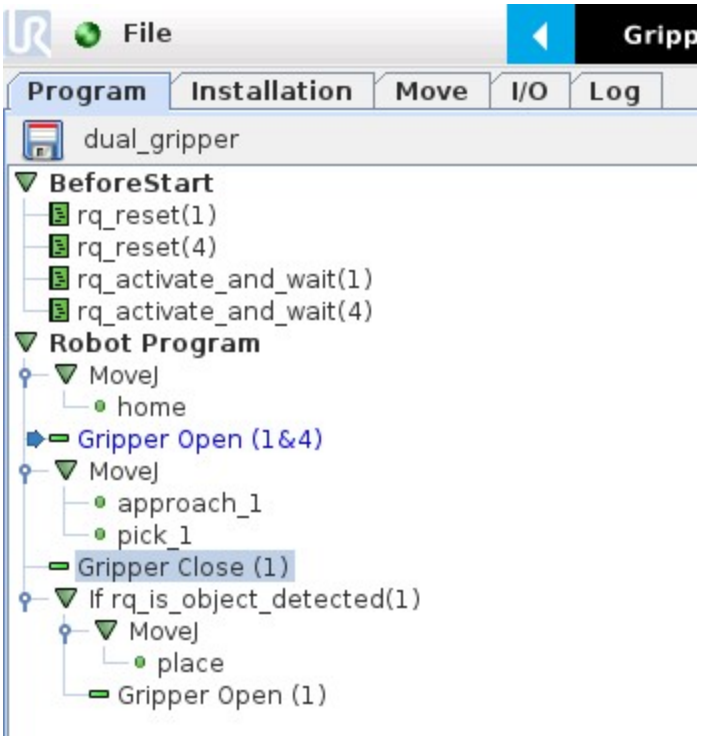

Fig. 4-16: Example of UR script commands with multiple Grippers

The functions listed below can be called using subprograms in PolyScope or with a script. Functions with the suffix **_and_wait** will wait for the Gripper to complete its operation before going to the next step.

Name	Description
rq_activate("gripper ID")	Sends the Gripper activation command. If it is already activated, nothing happens. Note that the Gripper must be activated to complete any other operation. Program execution continues before the end of activation.
rq_activate_and_wait("gripper ID")	Sends the Gripper activation command. If it is already activated, nothing happens. Note that the Gripper must be activated to complete any other operation. Program execution waits for the activation.
rq_auto_release_close_and_wait ("gripperID")	Slowly moves the Gripper to its maximum closed position. The Gripper must be activated after this command. Meant for emergency procedures.
rq_auto_release_open_and_wait ("gripperID")	Slowly moves the Gripper to its maximum opened position. The Gripper must be activated after this command. Meant for emergency procedures.
rq_close("gripper ID")	Moves the Gripper its fully closed position.
rq_close_and_wait("gripper ID")	Moves the Gripper to its fully closed position and waits until the motion is completed to execute the next command.
rq_current_pos("gripper ID")	Returns the current position of the fingers, from 0 to 255. Can be used to verify that the pick is successful, by comparing the finger position when the pick was taught with the similar-sized object.
rq_current_pos_norm("gripper ID")	Returns the current position of the fingers, normalized from 0% to 100%. Can be used to verify that the pick is successful, by comparing the finger position when the pick was taught with the similar-sized object.
rq_current_pos_mm("gripper ID")	Returns the current position of the fingers in millimeters, considering that the PolyScope configuration has been set to use the metric system as measurement system. Can be used to verify that the pick is successful, by comparing the finger position when the pick was taught with the similar-sized object.
rq_current_pos_in("gripper ID")	Returns the current position of the fingers in inches, considering that the PolyScope configuration has been set to use the imperial system as measurement system. Can be used to verify that the pick is successful, by comparing the finger position when the pick was taught with the similar-sized object.
rq_go_to("gripper ID")	Sets the **Go To** bit to 1.
rq_gripper_led_off()	Forces the LEDs to OFF status.
rq_gripper_led_on()	Allows the firmware to turn ON the LEDs when they have been force to OFF status.
rq_is_gripper_activated("gripper ID")	Sets global variable **rq_gripper_act** to 1 if the Gripper is activated and returns True. Otherwise sets the variable to 0 and returns False.
rq_is_motion_complete("gripper ID")	Returns True if the motion of the Gripper is complete and False otherwise. Can be useful to synchronize a program after a Gripper node is run without the option “Complete Gripper motion before next action”.
rq_is_object_detected("gripper ID")	Returns True if the Gripper motion has stopped due to an object. Returns False if Gripper motion was not impeded by an object. Useful for verifying that an object has been picked correctly before going to the next step. Note: this function is not reliable for very small objects.

Name	Description
	Refer to the user manual for more details.
rq_move_and_wait("position", "gripper ID")	Moves the Gripper to the position defined by the argument and waits until the motion is completed.
rq_move("position")	Moves the Gripper to the position defined by the argument.
rq_move_and_wait_norm ("position")	Moves the Gripper to the position defined by the argument, normalized from 0% to 100%. Waits until the motion is completed.
rq_move_norm("position", "gripper ID")	Moves the Gripper to the position defined by the argument, normalized from 0% to 100%.
rq_open("gripper ID")	Moves the Gripper to its fully opened position.
rq_open_and_wait("gripper ID")	Moves the Gripper to its fully opened position and waits until the motion is completed.
rq_print_gripper_driver_state ("gripper ID")	Prints the driver's state to the UR log window.
rq_print_gripper_driver_version ("gripper ID")	Prints the driver version to the UR log window.
rq_print_gripper_fault_code("gripper ID")	Prints the Gripper's fault code in the UR log window.
rq_print_gripper_firmware_version ("gripper ID")	Prints the Gripper's firmware version to the UR log window.
rq_print_gripper_num_cycles ("gripper ID")	Prints the Gripper's number of cycles in the UR log window.
rq_reset("gripper ID")	Resets the Gripper's activation status. Use after an autorelease before activating the Gripper.
rq_set_force("force", "gripper ID")	Sets the Gripper's force defined by the argument, from 0 to 255.
rq_set_force_norm("force", "gripper ID")	Sets the Gripper's force defined by the argument, normalized from 0% to 100%.
rq_set_speed("speed", "gripper ID")	Sets the Gripper's speed defined by the argument, from 0 to 255.
rq_set_speed_norm("speed", "gripper ID")	Sets the Gripper's speed defined by the argument, normalized from 0% to 100%.
rq_stop("gripper ID")	Stops the Gripper's motion. The **Go To** bit is set to 0.

4.8.5. Retro-compatibility of URCaps with legacy driver programs

The Gripper URCap can be used within programs that were made with the legacy driver package. To do so, you need to do the following modifications:

1. Open your .urp program in PolyScope and execute it.
    a. You should see an error message that tells you that some functions are double defined. This is because the URCap embeds the functions directly in the program preamble, so there is no need for a BeforeStart section.
2. Comment all the lines of the BeforeStart section from your older .urp program.
    a. You will still get an error. It arises because we changed some functions names due to a naming conflict.
3. To solve the problem, you can either suppress those functions or rename them.

Since they are probably not used in a production program, the fastest would be to suppress them, as shown in the figure below.

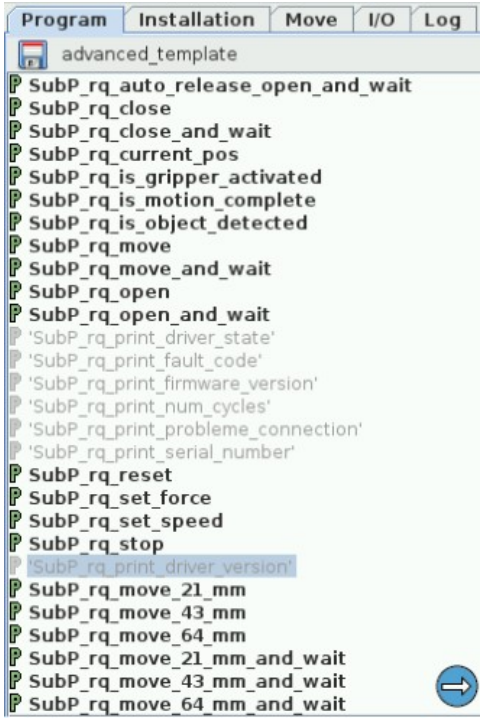

Fig. 4-17: Older program's subprograms to suppress or rename to use with URCaps package.

Here is the list of the functions that were renamed:

- rq_print_fault_code -> rq_print_gripper_fault_code
- rq_print_num_cycles -> rq_print_gripper_num_cycles
- rq_print_driver_state -> rq_print_gripper_driver_state
- rq_print_firmware_version -> rq_print_gripper_firmware_version
- rq_print_driver_version -> rq_print_gripper_driver_version

4.9. Control over Universal Robots without URCaps

If your Universal Robots controller is not compatible with the URCap package (see **Installation for Universal Robots** section) for compatibility), you can install the driver package. This package allows programming of the Gripper with scripts in a PolyScope program. It includes program templates and examples to help you get started with your own custom program. It also contains the Gripper toolbar for jogging and controlling the Gripper.

4.9.1. Gripper Toolbar

Overview

The Gripper toolbar is automatically installed with the driver package. The Gripper toolbar allows you to jog and test the Gripper. It is a great tool to try grasps with the Gripper while programming.

Toolbar collapsed	Toolbar expanded, Gripper activation window	Toolbar expanded, Gripper operation window :
	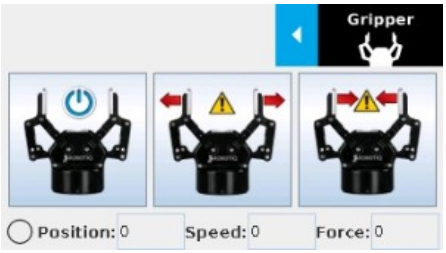	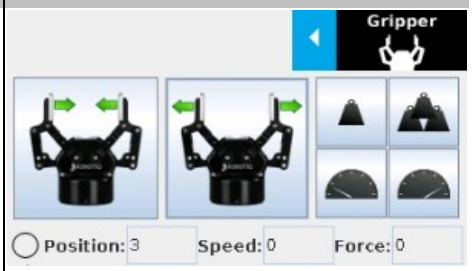

Tap the Gripper button to expand the toolbar.	• When the Gripper is not activated, the toolbar shows this window.
	  • You need to tap the Activate button to be able to jog the Gripper.
	  • Emergency open and close allows you to control the Gripper without activating, this mode will use a very low speed and force setting
		Use the buttons of this window to jog and test the Gripper.

Features

Toolbar collapsed

Icon	Functionality Name	Description
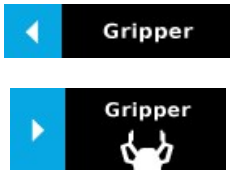	Gripper toolbar	Tap to toggle between expand and collapse the Hand-E Gripper toolbar. When grey, the functionality is not available.
	Activate	Tap to activate the Hand-E Gripper. The Gripper will fully open and close to set the zero of the position value..

Icon	Functionality Name	Description
	Emergency open	Slowly moves the Gripper to its fully closed position.
	Emergency close	Slowly moves the Gripper to its fully open position.

Toolbar expanded

Icon	Functionality Name	Description
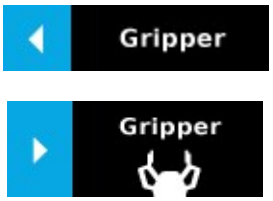	Gripper toolbar	Tap to toggle between expand and collapse the Hand-E Gripper toolbar. When grey, the functionality is not available.
	Open	Tap to fully open the Gripper.
	Close	Tap to fully close the Gripper.
Position	Requested position	Shows the actual position of the Gripper: • 0% : fully open • 100% : fully closed
Speed	Requested speed	Shows the actual speed set of the Gripper: • 0% : minimum speed • 100% : maximum speed
Force	Requested force	Shows the actual force set of the Gripper: • 0% : minimum force, regrasp feature disabled • 1% : minimum force, with regrasp feature enabled • 100% : maximum force, with regrasp feature enabled
	Increase force	Tap to increase the force request.

Icon	Functionality Name	Description
	Decrease force	Tap to decrease the force request.
	Increase speed	Tap to increase the speed request..
	Decrease speed	Tap to decrease the speed request.
	No object detected	Icon shown when no object is detected during a grasp.
	Object detected	Icon shown when an object is detected during a grasp.

When communication with the Gripper is not established, the expanded toolbar shows the driver version:

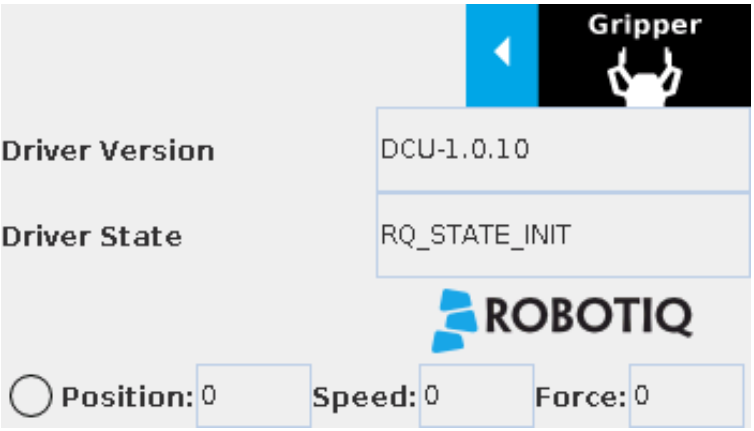

Fig. 4-18: Gripper toolbar expanded with driver version

> **Info**
>
> The driver state "RQ_STATE_INIT" means the driver is attempting to connect to a Robotiq Gripper. When connection is established, the normal toolbar detailed above will appear.

> **Tip**
>
> If you see the following toolbar with communication not established, check if your Gripper is powered first, then check if the RS-485 to USB converter is properly wired.

4.9.2. Demo Scripts

The following section details the demo scripts provided with the driver package.

pick_and_place_demo_with_subprograms.script is a demo script for pick and place applications using provided subprograms. The script uses subprograms included in the package such as **rq_set_force, rq_set_speed**, etc.

> **Info**
>
> All provided subprograms are identified with the prefix **rq_**.

The script uses **rq_speed** and **rq_force** as speed and force parameters to be used during the program. They can be modified using values from 0 to 255 (please refer to the **Provided Variables and Functions** section).

The script executes the following actions in sequence :

- Assign initial values to the global variables in the **Init Variables** section.
- Initiate the communication with the Gripper in the **BeforeStart** section.
- The **Robot Program** section contains the commands sent to the Gripper:
  - Activate the Gripper with **SubP_rq_activate_and_wait**.

    > **Info**
    >
    > Remember that all **_and_wait** subprograms will wait for the action to be completed before going to the next step.

  - Move the robot to a predetermined position

    > **Tip**
    >
    > Run with Universal Robots simulator first or make sure that the UR robot work area is totally cleared before running the script, as it will move the robot.

  - Close the Gripper with rq_close_and_wait.
  - Watch for object detection status:
    - If an object is detected, the script moves the robot and opens the Gripper.
    - If no object is detected, the script prompts a warning

.**pick_and_place_demo_async_partial_opening_without_subprograms.script** is similar to the previous demo, but without using subprograms. This demo uses asynchronous commands so that the robot and the Gripper will move at the same time (the previous example had the Gripper and the robot move separately).

4.9.3. Custom Programs

You can create your own program that commands the Gripper with the provided templates :

- Open basic_template.script in the list of provided templates;
- Push play to test the Gripper. The program will activate the Gripper and then do a loop of closing and opening the Gripper;
- Add your instructions under the robot program section. Program instructions can be added with PolyScope.

> When programming an object pick up, use the **rq_is_object_detected subprogram** and **rq_object_detect** variable to know if an object has been picked. The subprogram sets the **rq_object_detect** variable to 1 if an object is detected, 0 otherwise.

> Subprograms with the **_and_wait** will wait for the instruction to be completed before going to the next step. For example, **rq_close_and_wait** will wait for the motion to be completed before continuing to the next step, while **rq_close** will initiate motion and go to the next programmed step.

As shown in the figure below, the basic_template program will execute these instructions in a sequence:

- Assign initial values to the global variables with the Init Variables section.
- Initiate communication with the Gripper with the Before Start section.
- The Robot Program section contains the commands sent to the Gripper:
  - Activate the Gripper with SubP_rq_activate_and_wait.
  - Close the Gripper with rq_close_and_wait.
  - Open the Gripper with rq_open_and_wait.

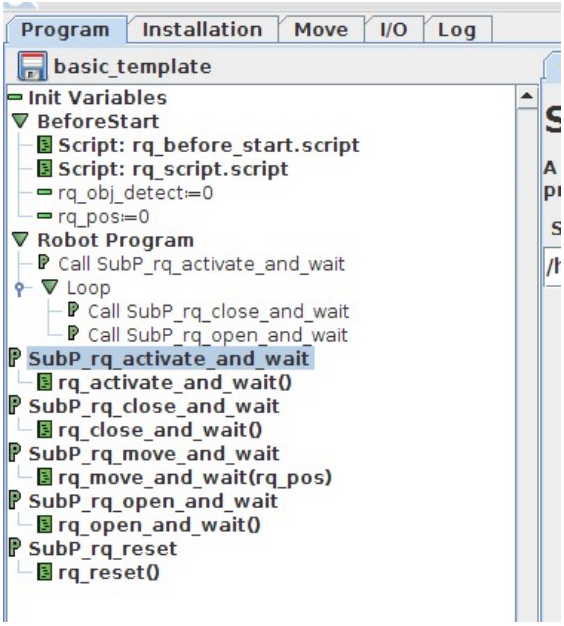

Fig. 4-19: Basic template as shown in UR PolyScope.

When using the **advanced_template**, you have access to all of the subprograms listed in the **Provided Variables and Functions** section. Unused subprograms can be removed from the list. You must use global variables to pass information, not arguments.

4.9.4. Provided Variables and Functions

The file **rq_script.script** contains function definitions and variables that enhance the programming of the Gripper. Here is the list of these variables and functions.

Variables are used when programming the Gripper using subprograms. Since it is not possible to pass arguments to subprograms, the global variables listed below must be used.

Name	Range	Description
rq_force()	[0-255]	Force set point. Change this variable by calling the subprogram **SubP_rq_set_force**.
rq_gripper_act()	[0-1]	1 if the Gripper is activated. This variable is updated by calling either **SubP_rq_is_gripper_activated or SubP_rq_activate_and_wait**.
rq_move_complete()	[0-1]	1 if the motion is complete. This variable is updated by calling one of the following: • **SubP_rq_move_and_wait;** • **SubP_rq_open_and_wait;** • **SubP_rq_close_and_wait;**

Name	Range	Description
		• **SubP_rq_is_motion_complete.**
rq_object_detect()	[0-1]	1 if an object is detected. This variable is updated by calling one of the following: • **SubP_rq_move_and_wait;** • **SubP_rq_open_and_wait;** • **SubP_rq_close_and_wait;** • **SubP_rq_is_object_detected.**
rq_pos()	[0-255]	Position set point. This variable is updated by calling **SubP_rq_current_pos**.
rq_speed()	[0-255]	Speed set point. Change this variable by calling the subprogram **SubP_rq_set_speed**.

Name	Description
rq_activate()	Sends the Gripper activation command. If it is already activated, nothing happens. Note that the Gripper must be activated to complete any other operation. Program execution continues before the end of activation.
rq_activate_and_wait()	Sends the Gripper activation command. If it is already activated, nothing happens. Note that the Gripper must be activated to complete any other operation. Program execution waits for the activation.
rq_auto_release_close_and_wait()	Slowly moves the Gripper to its maximum closed position. The Gripper must be activated after this command. Meant for emergency procedures.
rq_auto_release_open_and_wait()	Slowly moves the Gripper to its maximum opened position. The Gripper must be activated after this command. Meant for emergency procedures.
rq_close()	Moves the Gripper its fully closed position.
rq_close_and_wait()	Moves the Gripper to its fully closed position and waits until the motion is completed to execute the next command.
rq_current_pos()	Sets global variable **rq_pos** to the current Gripper position and returns this value.
rq_is_gripper_activated()	Sets global variable **rq_gripper_act** to 1 if the Gripper is activated and returns True. Otherwise sets the variable to 0 and returns False.
rq_is_motion_complete()	Sets global variable **rq_mov_complete** to 1 if the Gripper motion is complete and returns True. Otherwise sets the variable to 0 and returns False.
rq_is_object_detected()	Sets global variable **rq_obj_detect** to 1 if the Gripper has detected an object and returns True. Otherwise, sets the variable to 0 and returns False.
rq_move_and_wait()	Moves the Gripper to the position defined by the argument and waits until the motion is completed.
rq_move()	Moves the Gripper to the position defined by the argument.
rq_open()	Moves the Gripper to its fully opened position.
rq_open_and_wait()	Moves the Gripper to its fully opened position and waits until the motion is completed.
rq_set_force()	Writes the value of rq_force into the force setting.

Name	Description
rq_set_speed()	Writes the value of rq_speed into the speed setting.

5. User Interface

Visit the product page of Hand-E on support.robotiq.com to get the latest installer of the Robotiq User Interface along with appropriate documentation.

Please refer to the instruction manual of the Robotiq User Interface for more details.

6. Specifications

> **Info**
>
> The following manual uses the metric system, unless specified, **all dimensions are in millimeters**.

The following sub-sections provide data on the various specifications for Hand-E.

- Section 6.1: technical dimensions of Hand-E:
  - Dimensions for custom fingertips
  - Dimensions of available fingertips
- Section 6.2: mechanical specifications
- Section 6.3: electrical specifications

6.1. Technical dimensions

The figure below represents the Gripper's dimensions with axes X, Y, Z, and origin referenced for finger motion.

> **Info**
>
> All technical drawings in the present section are shown with the basic aluminum fingers.

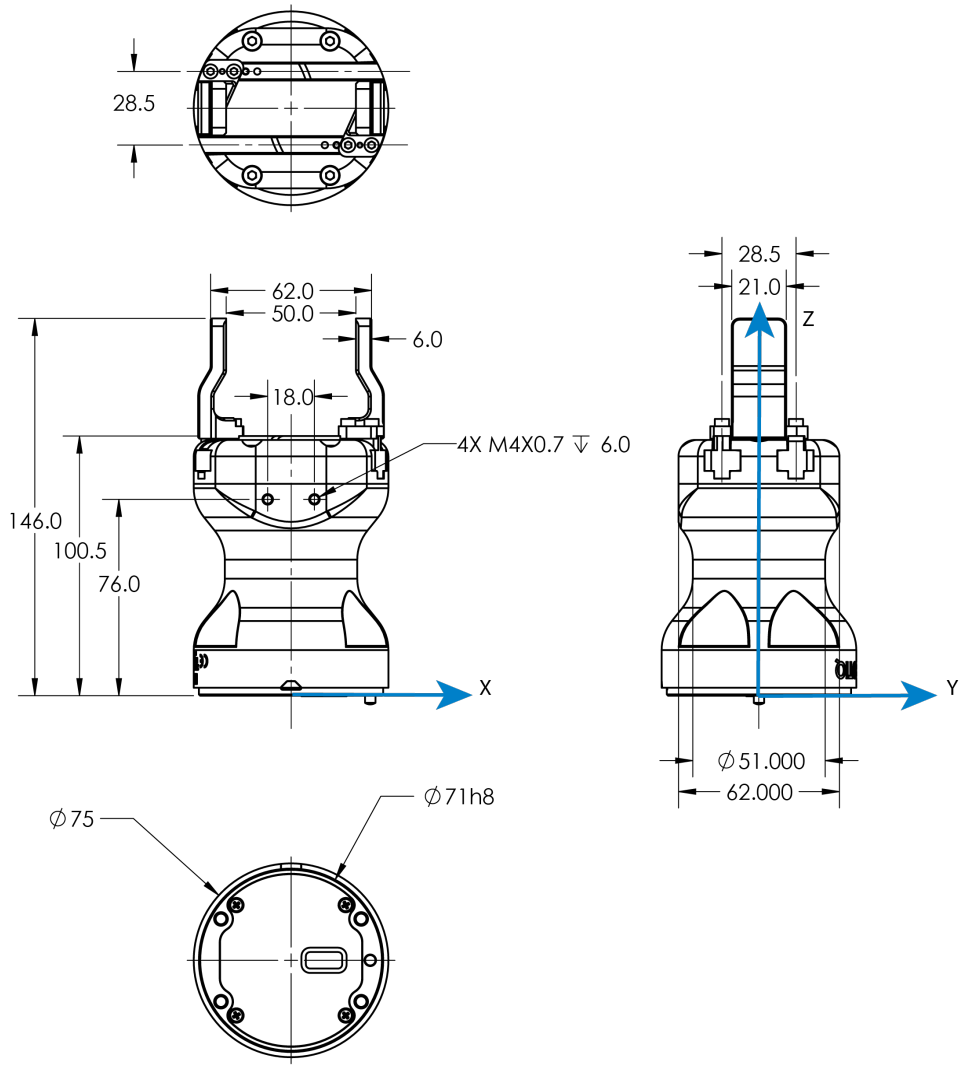

Fig. 6-1: General dimensions of Hand-E (open)

6.1.1. Couplings

Hand-E requires a coupling provided by Robotiq to operate.

The coupling is mandatory since it integrates electronics and electrical contacts.

Blank coupling

Below are the dimensions of the blank coupling, **AGC-CPL-BLANK-002** (please refer to the **Spare Parts, Kits and Accessories** section), available to create a custom bolt pattern. The blue section can be fully customized (holes can be placed in any part of this section) while the grey section can only be worked to a depth of 3 mm.

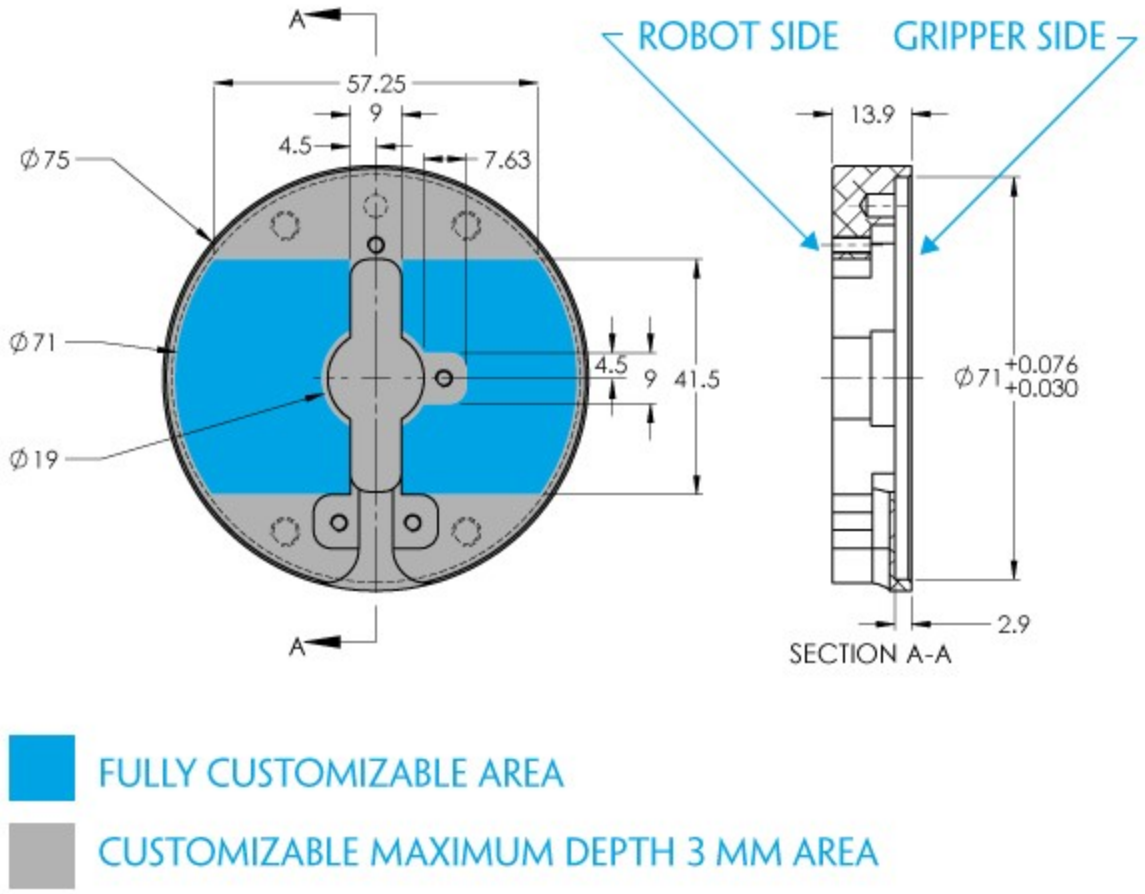

Fig. 6-2: Workable area dimensions of blank coupling AGC-CPL-BLANK-002

Coupling for ISO 9409-1-50-4-M6

Bolt pattern for coupling **GRP-CPL-062** (please refer to the **Spare Parts, Kits and Accessories** section) is compatible with:

- 50 mm pitch circle diameter:
  - (4) M6-1.0 low head socket cap screw clearance
  - (1) M6 indexing pin
  - ISO 9409-1 standard 50-4-M6

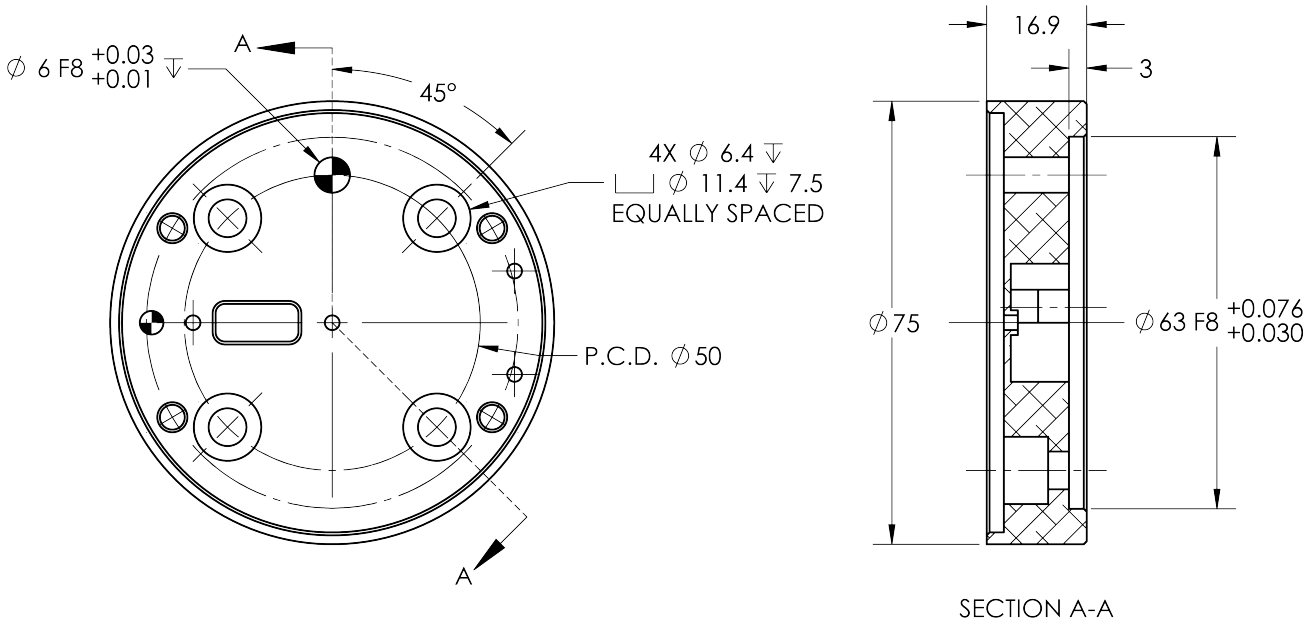

Fig. 6-3: Coupling for ISO 9409-1-50-4-M6.

Coupling for ISO 9409-1-31.5-4-M5

Bolt pattern for coupling **AGC-CPL-063-002** (please refer to the **Spare Parts, Kits and Accessories** section) is compatible with:

- 31.5 mm pitch circle diameter:
  - (4) M5-0.8 low head socket cap screw clearance
  - (1) M5 indexing pin
  - ISO 9409-1 standard 31.5-4-M5

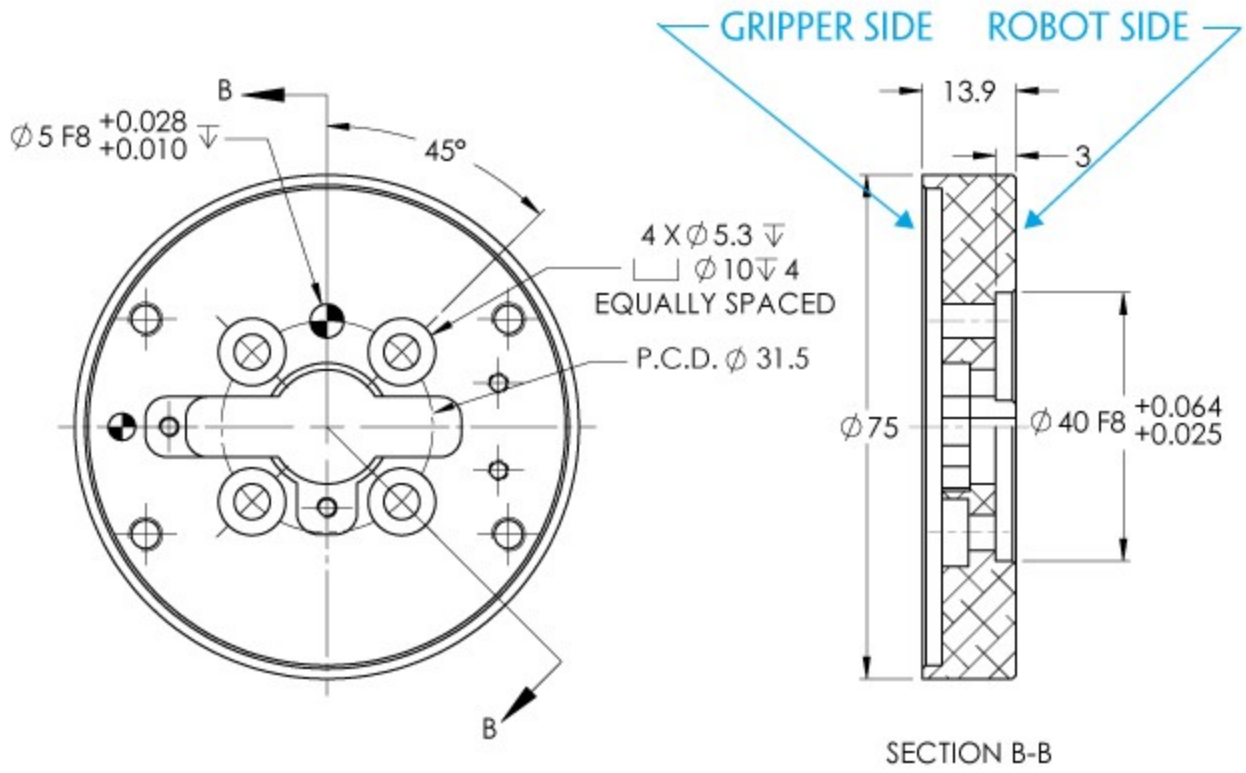

Fig. 6-4: Coupling for ISO 9409-1-31.5-4-M5.

Coupling for ISO 9409-1-40-4-M6

Bolt pattern for coupling **AGC-CPL-064-002** (please refer to the **Spare Parts, Kits and Accessories** section) is compatible with:

- 40 mm pitch circle diameter:
  - (4) M6-1.0 low head socket cap screw clearance
  - (1) M6 indexing pin
  - ISO 9409-1 standard 40-4-M6

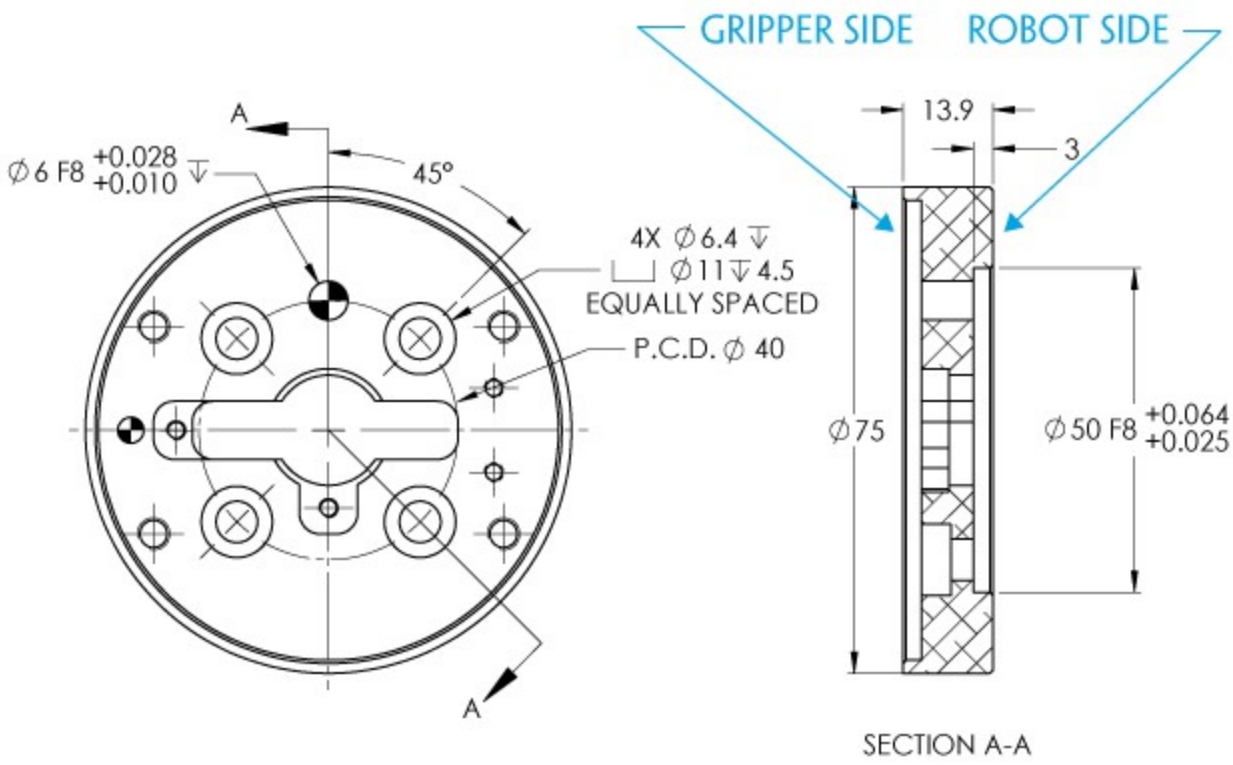

Fig. 6-5: Coupling for ISO 9409-1-40-4-M6.

Coupling for PCD 56 with 8 x M4

Bolt pattern for coupling AGC-CPL-065-002 (please refer to the **Spare Parts, Kits and Accessories** section) is compatible with:

- 56 mm pitch circle diameter:
  - (8) M4-0.7 low head socket cap screw clearance
  - (1) M4 indexing pin
  - 62 mm diameter internal insert

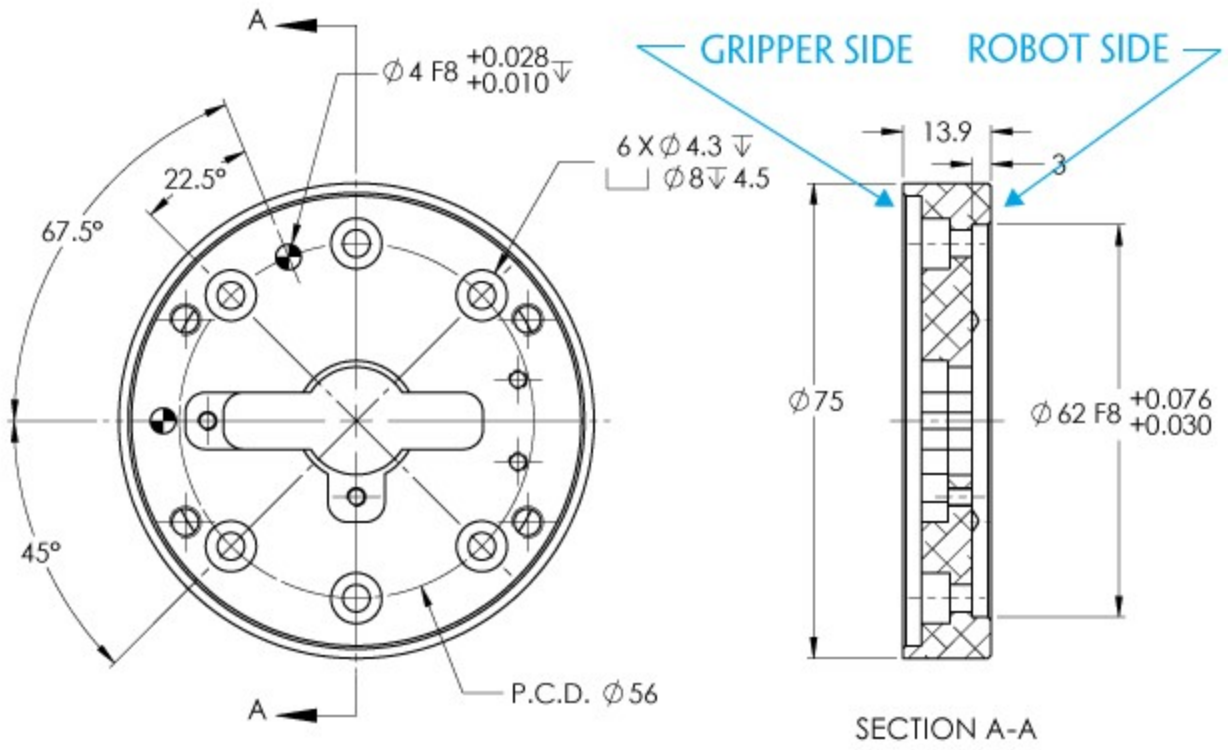

Fig. 6-6: Coupling for PCD 56 mm with 8 x M4 clearance.

> **Info**
>
> Although coupling AGC-CPL-065-002 is compatible with 8 x M4 threads on a 56 mm PCD it uses only 6 of the 8 normally present holes.

Coupling for PCD 56 with 6 x M4

Bolt pattern for coupling **AGC-CPL-066-002** (please refer to the **Spare Parts, Kits and Accessories** section) is compatible with:

- 56 mm pitch circle diameter:
  - (6) M4-0.7 low head socket cap screw clearance
  - (1) M6 indexing pin
  - 42 mm diameter external insert

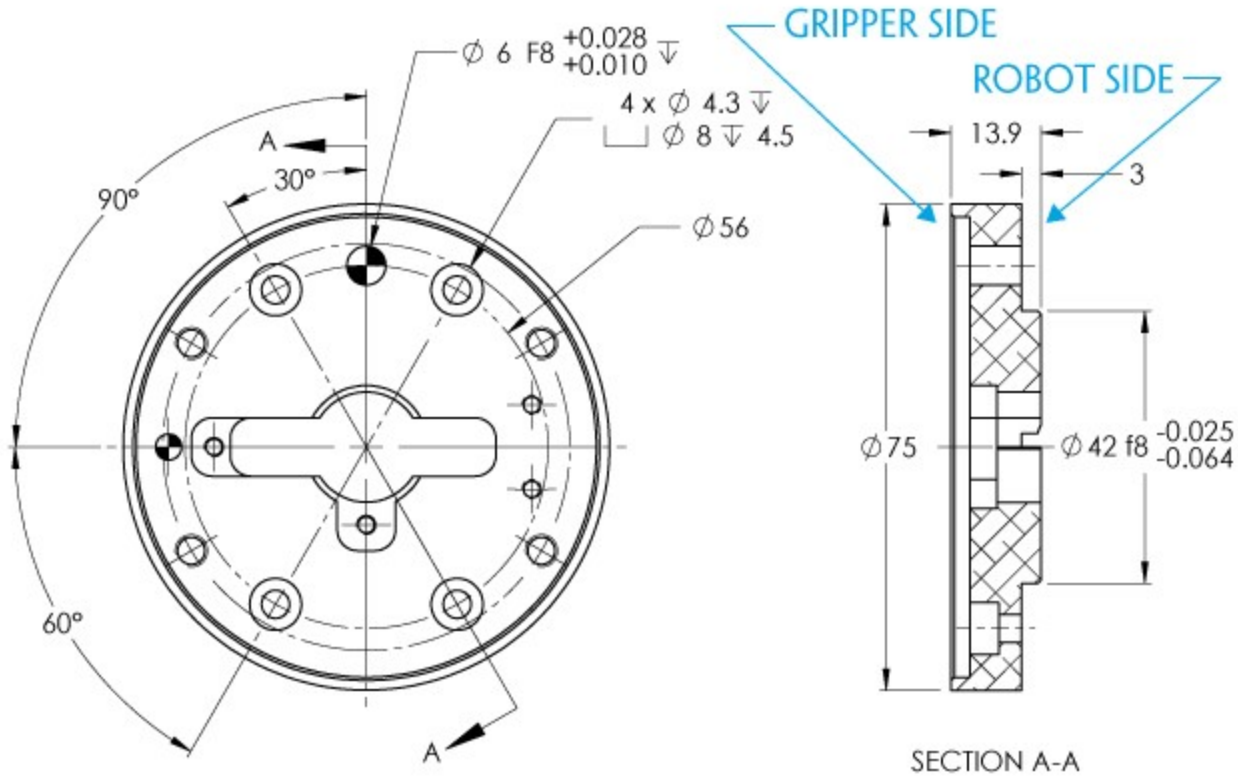

Fig. 6-7: Coupling for PCD 56 mm with 6 x M4 clearance.

Coupling for PCD 60 with 4 x M5

Bolt pattern for coupling **AGC-CPL-067-002** (please refer to the **Spare Parts, Kits and Accessories** section) is compatible with:

- 60 mm pitch circle diameter:
  - (4) M5-0.8 low head socket cap screw clearance
  - (1) M5 indexing pin
  - 34 mm diameter external insert

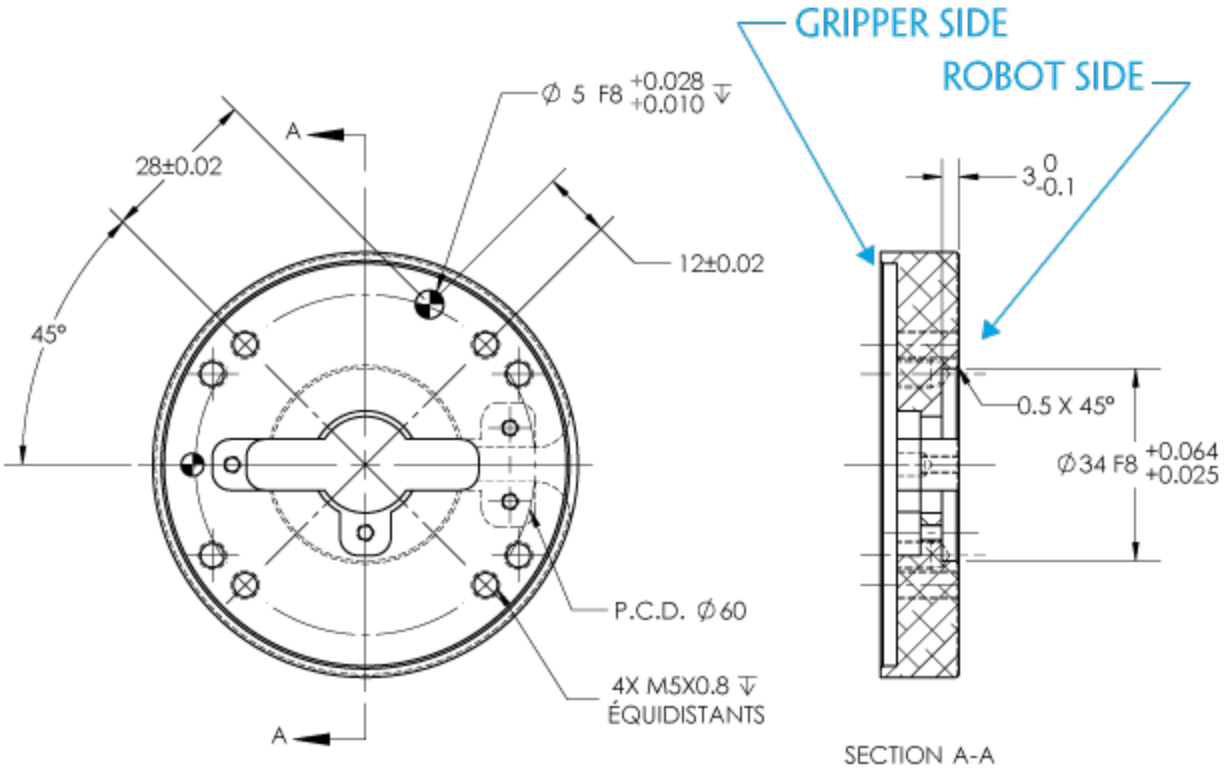

Fig. 6-8: Coupling for PCD 60 mm with 4 x M5 clearance.

Coupling for PCD 63 with 6 x M6

Bolt pattern for coupling AGC-CPL-068-002 (please refer to the **Spare Parts, Kits and Accessories** section) is compatible with:

- 63 mm pitch circle diameter:
  - (6) M6-1.0 low head socket cap screw clearance
  - (2) M6 indexing pins

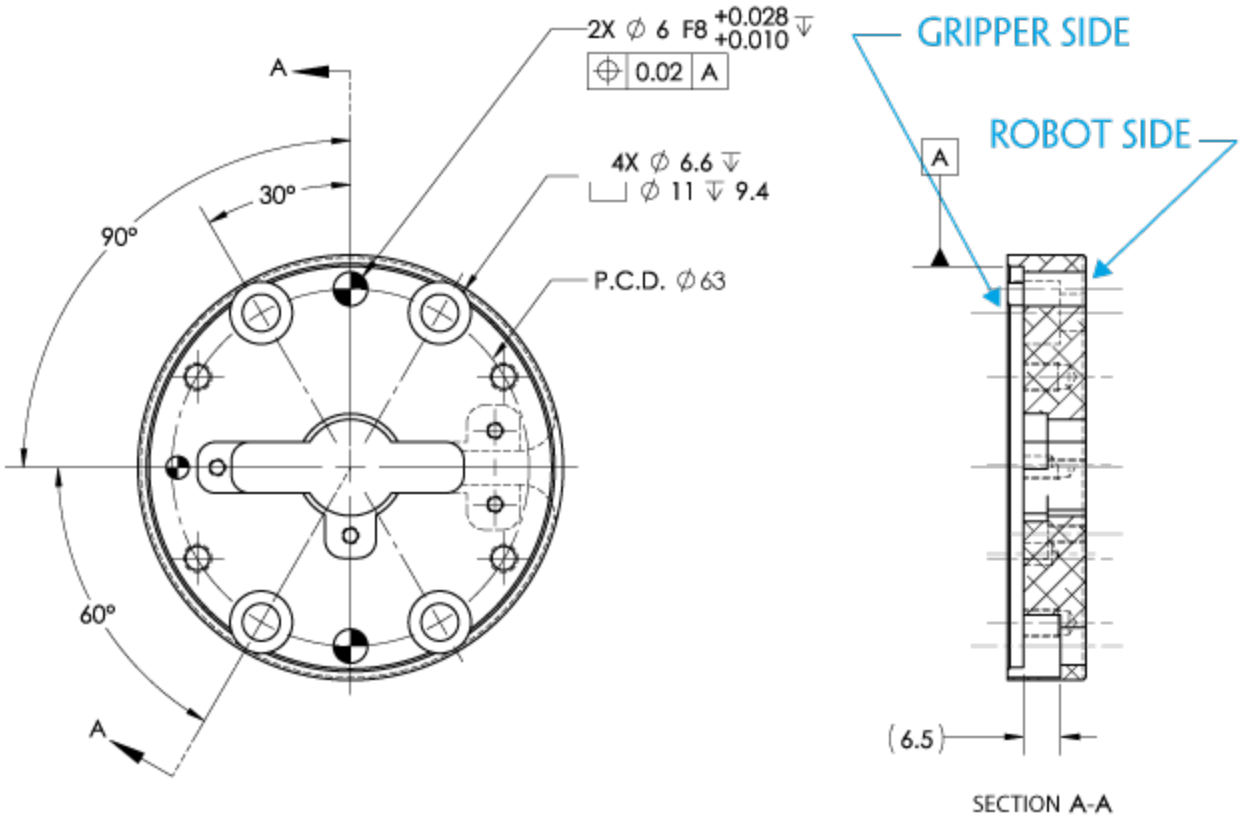

Fig. 6-9: Coupling for PCD 63 mm with 6 x M6 clearance.

6.1.2. Fingers and fingertips

The contact grip points for Hand-E are its two fingertip pads.

Fingertip options are supplied by Robotiq (please refer to the **Spare Parts, Kits and Accessories** section). Users can create their own fingertips from scratch. The figure below represents the fingertip holder, the permanent, non customizable part of the Gripper finger on which the fingertip must be mounted.

Custom fingertip design must meet the following specifications:

- Forces exerted at the end of the fingertips must not exceed 100 N , regardless of the direction. Please refer to the **Moment and force limits** section for more details.

> **Warning**
>
> The following limits must be respected at all times.
> Calculation of maximum moment and force should include robot acceleration and safety factors.

- Refer to **Mechanical specifications** section to evaluate the grip force according to your fingertip design.

> **Info**
>
> You can install custom fingertips directly on the rack or on the fingertip holder.

> **Tip**
>
> Fingertips can be mounted directly on the racks or on fingertip holders.

Rack

A finger is installed directly on a rack. You may customize your own fingers that will mount on this part. The basic aluminum fingers (HND-FIN-ALU-KIT) are mounted directly onto it.

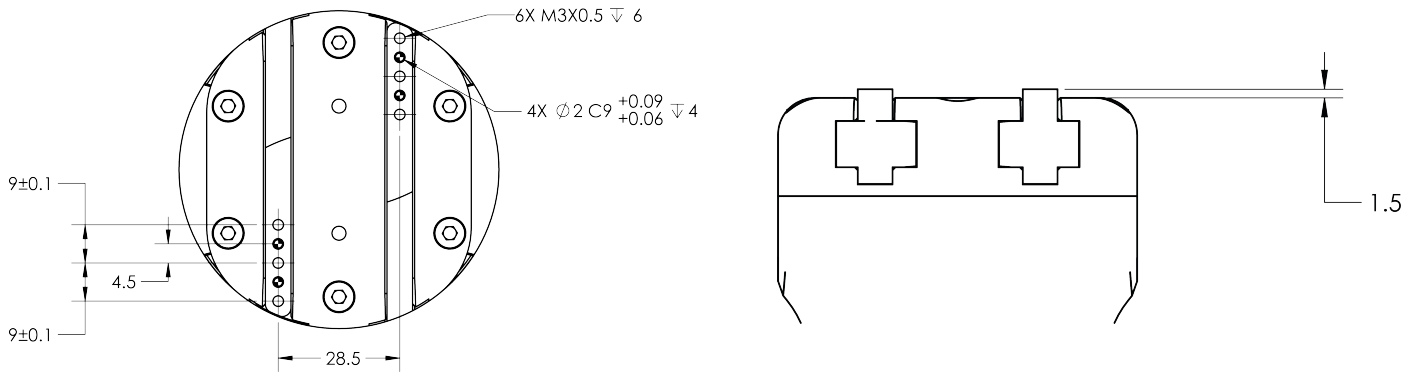

Fig. 6-10: Racks in rack housing

Basic aluminum finger

The figure below represents the basic aluminum fingertip (HND-FIN-ALU-KIT); please refer to the **Spare Parts, Kits and Accessories** section. This finger allows a 0-50 mm stroke.

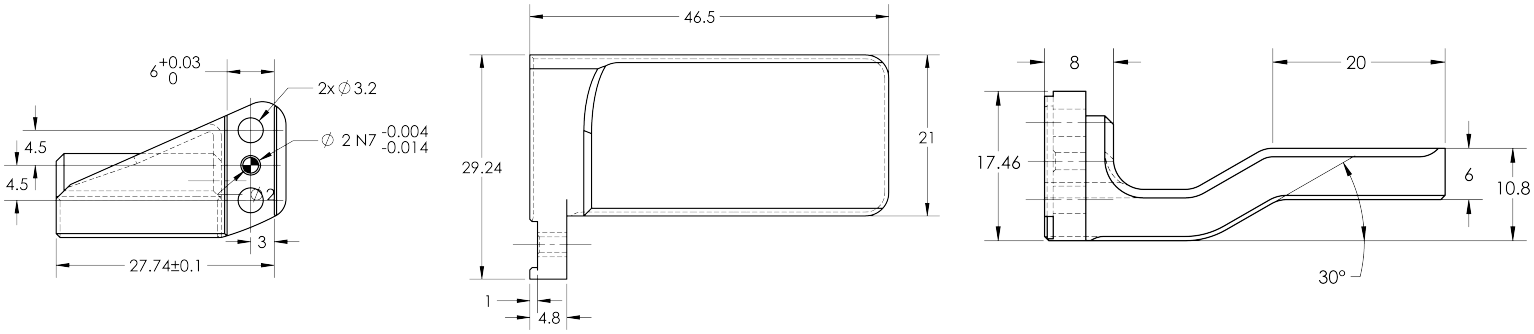

Fig. 6-11: Aluminum finger

Fingertip holder

In order to install fingertips on the racks, fingertip holders must be used (HND-TIP-HLD-KIT); please refer to the **Spare Parts, Kits and Accessories** section. You may customize fingertips to install directly on those. Both the flat silicone (HND-TIP-SLC-KIT) and V-groove fingertips , (HND-TIP-VGR-KIT) install on the fingertip holders.

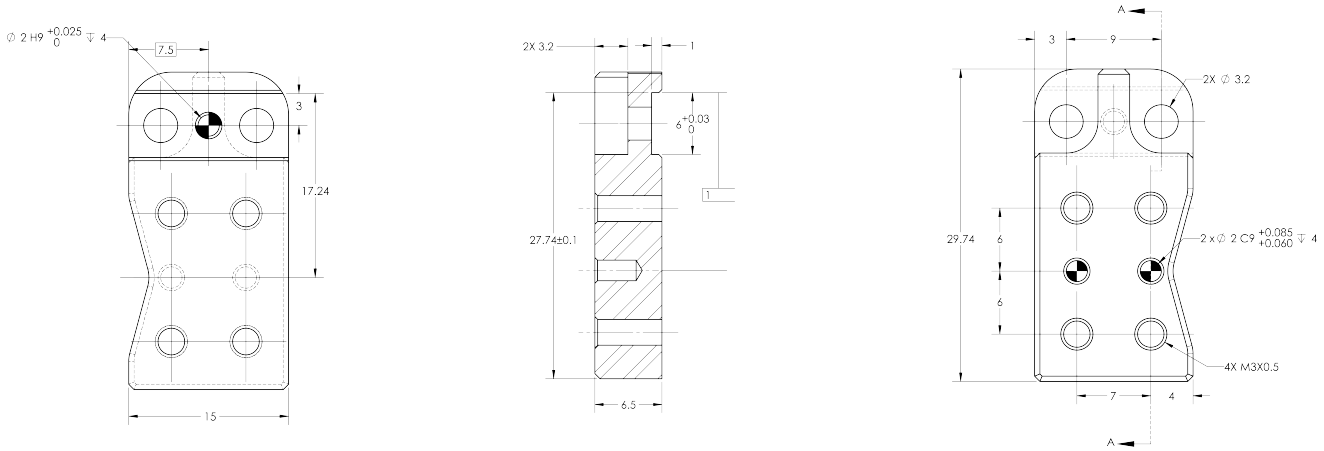

Fig. 6-12: Fingertip holder

Flat silicone fingertip

The figure below represents a flat silicone fingertip (HND-TIP-SLC-KIT); please refer to the **Spare Parts, Kits and Accessories** section. This fingertip has a flat silicone surface with an optimal friction coefficient for picking parts. This fingertip must be mounted on a rack using the fingertip holder (HND-TIP-HLD-KIT).

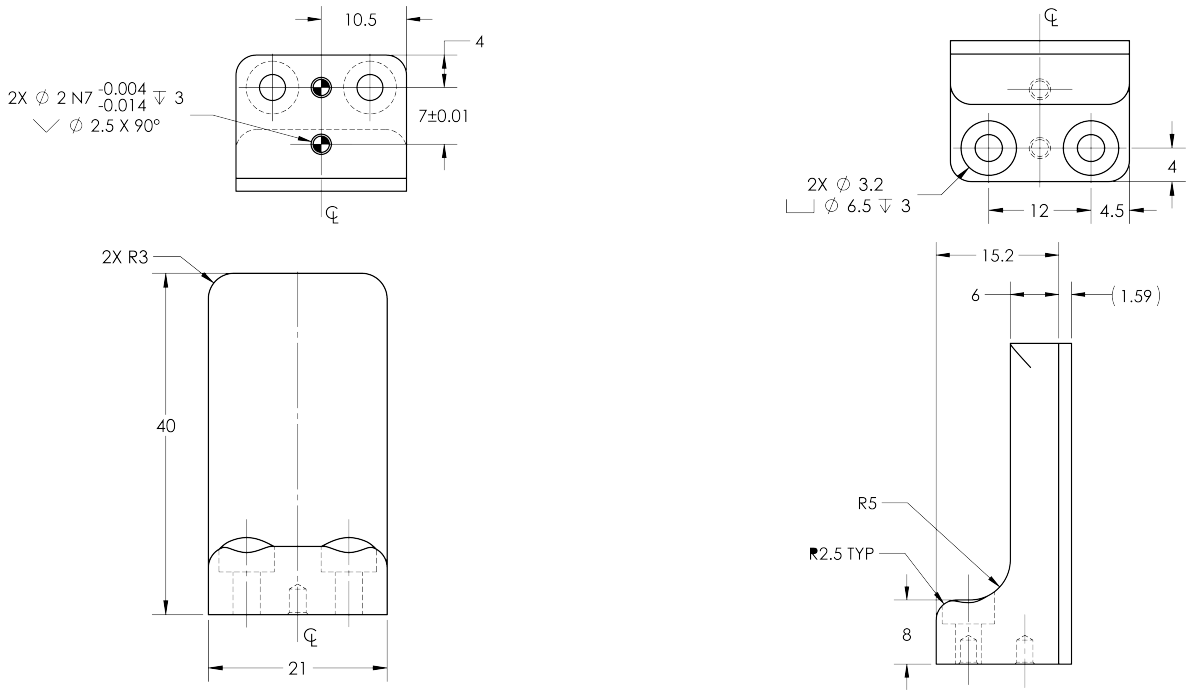

Fig. 6-13: Flat silicone fingertip

Grooved fingertip

The figure below the available grooved fingertip (HND-TIP-VGR-KIT); please refer to the **Spare Parts, Kits and Accessories** section. This fingertip has a grooved surface with an optimal shape for picking cylindrical parts (by its horizontal and vertical grooves). This fingertip must be mounted on the racks using the fingertip holder (HND-TIP-HLD-KIT).

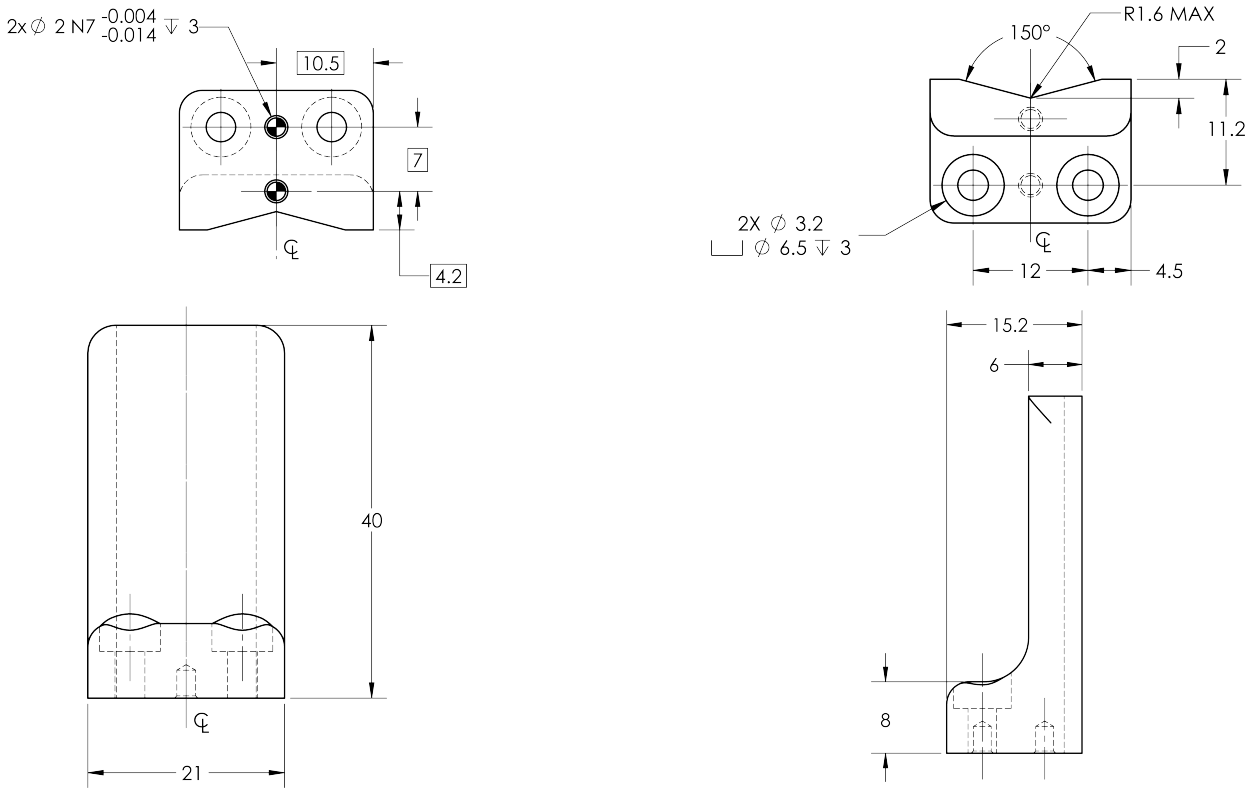

Fig. 6-14: Grooved fingertip

6.2. Mechanical specifications

6.2.1. Specifications:

Specification	Metric Units	Imperial Units
Gripper opening	0 - 50 mm	0 - 1.97 in.
Maximum recommended payload, Form-fit grasp	5 kg	11 lbs
Maximum recommended payload, Friction grasp	3 kg	6.6 lbs
Gripper height (without fingertips)	100.5 mm	3.94 in
Gripper diameter	75 mm	2.95 in
Gripper weight (including coupling)	1070 g	2.3 lbs
Grip force	20 - 130 N	4.5 - 27 lbf
Finger speed	20 to 150 mm/s	0.8 to 5.9 in/s

Info

All specs are measured with coupling GRP-CPL-062 and basic aluminum fingertips (HND-FIN-ALU-KIT).

Payload and force

Actuation force model used to calculate the recommended friction payload (*W*):

$$W = \frac{2FC_f}{S_f}$$

where:

- *F* is the force that is applied to the load by the Gripper.
- *Cf* is the friction coefficient between the fingertip and the part load.
- *Sf* is a safety factor to be determined by the robot integrator.

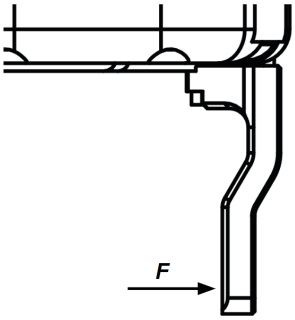

Fig. 6-15: Actuation force on the fingertip of the Hand-E Gripper

Info

- The Actuation Force is the force that can be applied to an object by the motor of the Gripper.
- The Gripper has a power off brake. This means that when no power goes to the Gripper, the fingers are blocked.

Info

For example, if the silicone fingertips (HND-TIP-SLC-KIT) are used to lift a lubricated steel part (machine tending with cutting oils), the friction coefficient would be 0.3 (tested static coefficient of friction).

Maximum weight with a safety factor of 2.4 and maximum force would be:

W = (2 x 130 N x 0.3) / 2.4 = 32.5 N

This calculation means that a 3.3 kg part will be held by the Gripper when not moving (standing still). When accelerating, the payload will decrease.

The biggest factor in such calculations will always be the **friction coefficient**, we recommend testing the coefficient.

Warning

You must consider the **robot acceleration** in your payload calculations.
Robot emergency stops will lead to major deceleration velocities.

Maximum payload/External force vs. Custom finger design

The maximum payload force recommended depends on the distance on the Z-axis at which the force/payload (F) is applied when using custom fingers on the Hand-E Gripper.

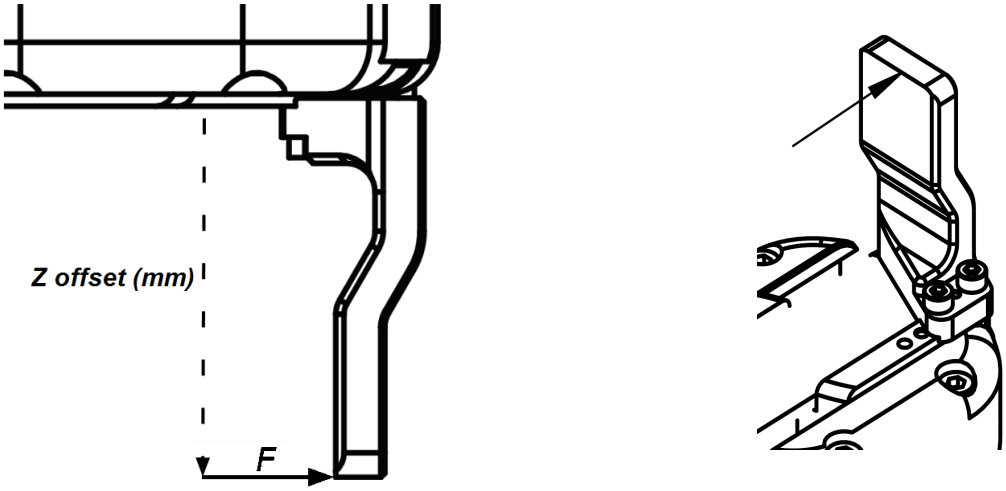

Fig. 6-16: Z-axis offset at which force/payload is applied (tip of the finger, in the middle of the inner surface)

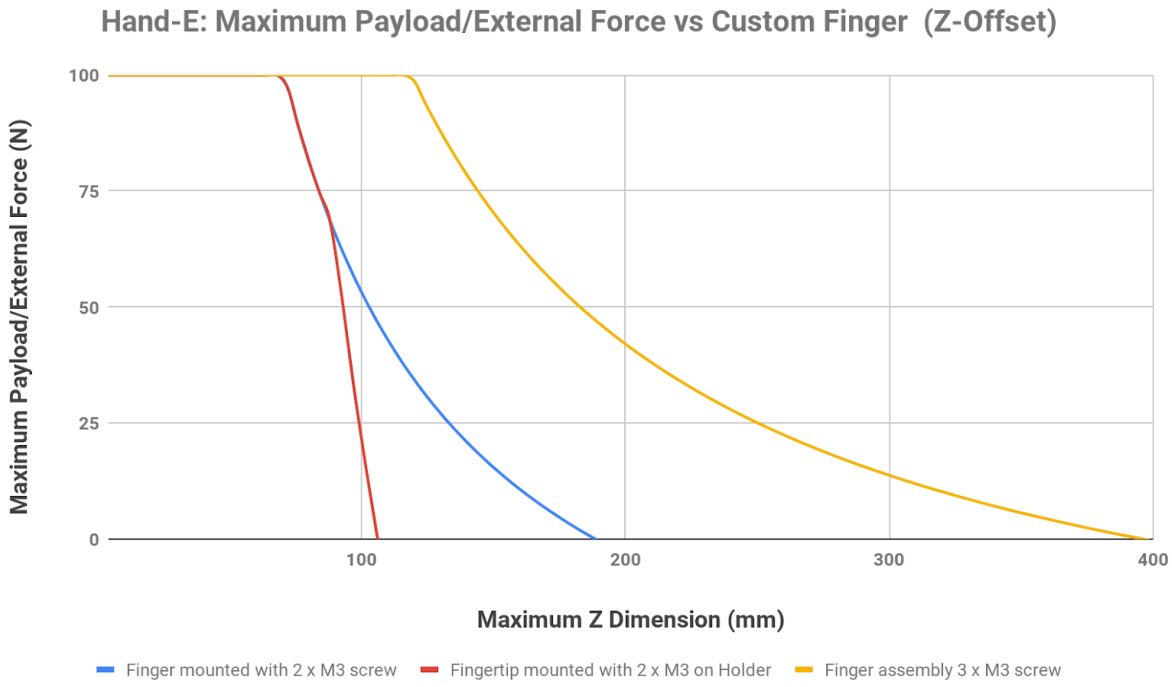

Fig. 6-17: Scheme Illustrating Maximum Payload/External Force vs. Z-Offset on Custom finger

- The **blue curve** in the graph represents the maximum force/payload (F) recommended at given Z offset for a custom finger design **mounted directly on the rack with two (2) M3 screws**.
- The **red curve** in the graph represents the maximum force/payload (F) recommended at given Z offset for a custom finger design **mountend on a fingertip holder with two (2) M3 screws**.
- The **yellow curve** in the graph represents the maximum force/payload (F) recommended at given Z offset for a custom finger design **mounted directly on the rack with three (3) M3 screws**.

Info

The data is calculated at the resulting position of the force applied, based on the strength of the M3 screws used. The maximum grasping force is included in the calculation; it represents the maximum force that can be added to the finger (payload force + external force).

Warning

- Fatigue stress has not been taken into consideration in the calculations.
- Robot acceleration and safety factor have not been taken into consideration in the calculations.

Caution

In order to address other custom specific cases with regards to your own application, the main item to address is the strength of the screws used for mounting the fingers.

Friction grasp and form-fit grasp

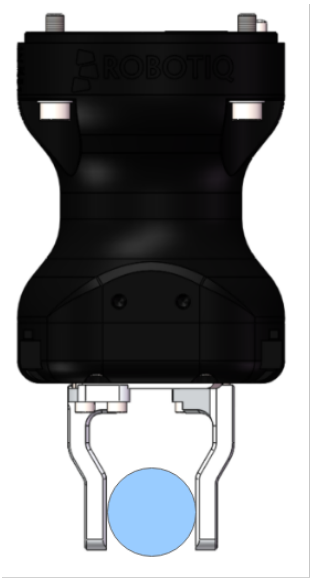

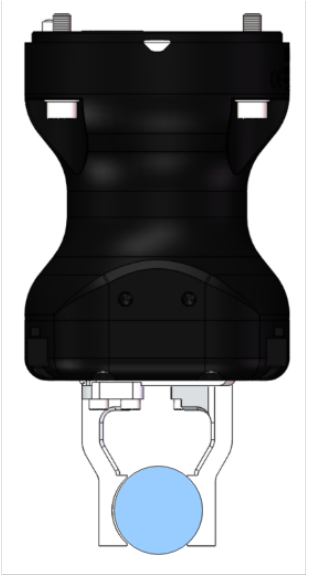

Maximum payload by grasp type

Grasp Type	Maximum Payload
Friction grasp	3 kg
Form-fit grasp	5 kg

6.2.2. Center of mass and tool center point

Couplings are included when Grippers are not mounted on the Camera. Dual Gripper adapter plates are included where appropriate.

Products	Center of mass (mm)			TCP (mm)						Mass (g)
				Gripper 1			Gripper 2			
	X	Y	Z	X	Y	Z	X	Y	Z	
FT Sensor	-3.0	0.0	17.0	0.0	0.0	37.5	-	-	-	300.0
Camera	-3.0	4.5	9.0	0.0	0.0	23.5	-	-	-	245.0
2F-85	0.0	0.0	58.0	0.0	0.0	174.0	-	-	-	925.0
2F-140	0.0	0.0	73.0	0.0	0.0	244.0	-	-	-	1025.0
Hand-E	0.0	0.0	57.5	0.0	0.0	157.0	-	-	-	1090.0
Dual grippers plate	0.0	0.0	15.5	-	-	-	-	-	-	265.0
FT Sensor + 2F-85	-0.7	0.0	76.3	0.0	0.0	211.5	-	-	-	1225.0
FT Sensor + 2F-140	-0.7	0.0	89.3	0.0	0.0	281.5	-	-	-	1325.0
FT Sensor + Hand-E	-0.6	0.0	78.2	0.0	0.0	194.5	-	-	-	1390.0
Camera + 2F-85	-0.7	1.2	57.1	0.0	0.0	175.5	-	-	-	975.0
Camera + 2F-140	-0.7	1.1	72.4	0.0	0.0	246.5	-	-	-	1075.0
Camera + Hand-E	-0.6	1.0	57.4	0.0	0.0	159.5	-	-	-	1135.0
FT Sensor + Camera + 2F-85	-1.3	0.9	76.3	0.0	0.0	213.0	-	-	-	1275.0
FT Sensor + Camera + 2F-140	-1.2	0.8	89.6	0.0	0.0	284.0	-	-	-	1375.0
FT Sensor + Camera + Hand-E	-1.1	0.8	78.6	0.0	0.0	197.0	-	-	-	1435.0
Hand-E/Hand-E	0.0	0.0	62.0	154.0	0.0	138.0	-154.0	0.0	138.0	2445.0
Hand-E/2F-85	5.9	0.0	61.7	154.0	0.0	138.0	-166.0	0.0	150.0	2280.0
Hand-E/2F-140	-2.4	0.0	66.6	154.0	0.0	138.0	-215.5	0.0	199.5	2380.0
2F-85/2F-85	0.0	0.0	61.4	166.0	0.0	150.0	-166.0	0.0	150.0	2115.0
2F-85/2F-140	-8.7	0.0	66.6	166.0	0.0	150.0	-215.5	0.0	199.5	2215.0
2F-140/2F-140	0.0	0.0	71.4	215.5	0.0	199.5	-215.5	0.0	199.5	2315.0
Camera + Hand-E/Hand-E	-0.3	0.4	78.5	154.0	0.0	161.5	-154.0	0.0	161.5	2690.0
Camera + Hand-E/2F-85	5.0	0.4	77.8	154.0	0.0	161.5	-166.0	0.0	173.5	2525.0
Camera + Hand-E/2F-140	-2.5	0.4	82.5	154.0	0.0	161.5	-215.5	0.0	223.0	2625.0
Camera + 2F-85/2F-85	-0.3	0.5	77.0	166.0	0.0	173.5	-166.0	0.0	173.5	2360.0
Camera + 2F-85/2F-140	-8.1	0.4	82.1	166.0	0.0	173.5	-215.5	0.0	223.0	2460.0
Camera + 2F-140/2F-140	-0.3	0.4	86.7	215.5	0.0	223.0	-215.5	0.0	223.0	2560.0
FT Sensor + Hand-E/Hand-E	-0.3	0.0	90.5	154.0	0.0	175.5	-154.0	0.0	175.5	2745.0
FT Sensor + Hand-E/2F-85	4.9	0.0	89.7	154.0	0.0	175.5	-166.0	0.0	187.5	2580.0
FT Sensor + Hand-E/2F-140	-2.5	0.0	94.3	154.0	0.0	175.5	-215.5	0.0	237.0	2680.0
FT Sensor + 2F-85/2F-85	-0.4	0.0	88.8	166.0	0.0	187.5	-166.0	0.0	187.5	2415.0
FT Sensor + 2F-85/2F-140	-8.0	0.0	93.7	166.0	0.0	187.5	-215.5	0.0	237.0	2515.0
FT Sensor + 2F-140/2F-140	-0.3	0.0	98.4	215.5	0.0	237.0	-215.5	0.0	237.0	2615.0
FT Sensor + Camera + Hand-E/Hand-E	-0.5	0.4	106.1	154.0	0.0	199.0	-154.0	0.0	199.0	2990.0
FT Sensor + Camera + Hand-E/2F-85	4.2	0.4	104.9	154.0	0.0	199.0	-166.0	0.0	211.0	2825.0
FT Sensor + Camera + Hand-E/2F-140	-2.5	0.4	109.4	154.0	0.0	199.0	-215.5	0.0	260.5	2925.0
FT Sensor + Camera + 2F-85/2F-85	-0.6	0.4	103.5	166.0	0.0	211.0	-166.0	0.0	211.0	2660.0
FT Sensor + Camera + 2F-85/2F-140	-7.6	0.4	108.4	166.0	0.0	211.0	-215.5	0.0	260.5	2760.0
FT Sensor + Camera + 2F-140/2F-140	-0.6	0.4	112.9	215.5	0.0	260.5	-215.5	0.0	260.5	2860.0

Info

The angle to calculate the TCP for Grippers mounted on a dual gripper assembly is as follows:

- Rx = 0
- Ry+/Ry- = 0.7854
- Rz = 0

The coordinate system used to calculate the moment of inertia and center of mass of the Gripper is shown in the figure below.

$$I = \begin{bmatrix} I_{XX} & I_{XY} & I_{XZ} \\ I_{YX} & I_{YY} & I_{YZ} \\ I_{ZX} & I_{ZY} & I_{ZZ} \end{bmatrix} = \begin{bmatrix} 5341 & 0 & 0 \\ 0 & 5447 & 0 \\ 0 & 0 & 636 \end{bmatrix} = \begin{bmatrix} 18.3 & 0 & 0 \\ 0 & 18.6 & 0 \\ 0 & 0 & 2.2 \end{bmatrix}$$

$$kg * mm^2 \qquad lb * in^2$$

Fig. 6-18: Inertia matrix for Hand-E

6.2.3. Moment and force limits

The Hand-E Gripper has limits for moment and force values. The maximum moment and force values are independent of the grasp force applied by the Gripper on its payload. For payload calculation, please refer to the **Payload and force** section.

> **Warning**
>
> The following limits must be respected at all times.
> Calculation of maximum moment and force should include robot acceleration and safety factors.

Parameter	Hand-E with Basic Aluminum Fingers
F_x, F_y, F_z	100 N
M_x*	2.65 Nm
M_y*	3.74 Nm
M_z*	2.00 Nm

*Moments in x and y are calculated from the base of the fingers, as shown in the figure below.

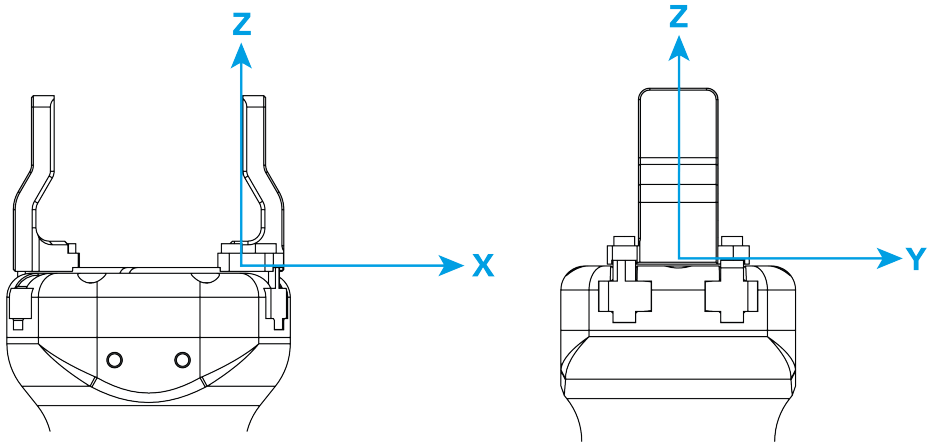

Fig. 6-19: Reference frame for maximum force and moment values applied to the fingers

Usage examples with listed limits:

- After picking its normal payload, the robot can use Hand-E to apply up to 100 N of force in any direction. Applying more than 100 N can damage the Gripper or result in payload loss.
- The Gripper can pick a screwdriver and apply 2 Nm of torque to screw (such a moment would be applied in the Z axis).

6.3. Electrical specifications

SPECIFICATION	VALUE
Operating supply voltage	24 V DC ±10%
Quiescent power (minimum power consumption)	1 W
Peak current	1.1 A

7. Maintenance

Hand-E requires only external maintenance with limited downtime.

Maintenance is required after specified usage, measured in cycles (open and close motion of the gripper).

Following the maintenance interval will ensure :

- Correct functioning of your Gripper.
- Validity of your warranty.
- Proper lifetime for your Gripper.

Warning

Unless otherwise indicated, any **repairs** done on the Gripper will be performed by Robotiq.

Info

A cycle is defined as a **go to requested position** command that results in grip force being applied (picking an object while opening or closing or closing the fingers on themselves).

Maintenance Intervals

Operation	Daily	Weekly	1 M cycles	2 M cycles
Gripper Cleaning	Dirty conditions	Normal conditions		
Periodic Inspection			X	
Rack and pinion mechanism cleaning				X

Maintenance operations are for the average normal usage of the Gripper, the maintenance intervals must be adjusted according to environmental conditions such as:

- Operating temperature
- Humidity
- Presence of chemical(s)
- Presence of physical parts (debris, scraps, dust, grease etc.)
- Interaction with operated parts (sharp or rough)
- Dynamics of the operation (accelerations)

7.1. Gripper cleaning

Maintenance Interval	Tools You Need	Parts You Need
Weekly or daily in dirty operating conditions	• 4 mm hex key • Dry tissue or towel • Medium strength thread locker	None (unless damage is detected)

Info

Always turn off the robot and the Gripper power supply before performing any maintenance operations.

Caution

The maintenance operator must be grounded to prevent electrostatic discharge that could damage the Gripper electronics.

1. Remove the Gripper from its coupling using the 4 mm hex key to unscrew the four (4) M5-0.8 x 35mm socket head cap screws. Note that each screw uses a tooth lock washer, do not lose them.
2. Clean the Gripper with a dry towel, remove all debris, dirt and dust from the surface of the Gripper, clean all pads, dry thoroughly.
3. Clean the coupling with a dry towel, pay particular attention to the electrical contact.
4. Visually inspect the Gripper and pay attention to any visible damage.
5. Put the coupling back on and fix it with the four (4) M5-0.8 x 35mm socket head cap screws, use the tooth lock washers, apply medium strength thread locker to the M5 screws.

When cleaning the Gripper, verify that the fingers or fingertips are still intact. If there is wear visible, you can change the fingers or fingertips, using the ones provided by Robotiq or custom ones. See Spare parts and accessories section to order Hand-E replacement parts.

In order to replace a finger:

- Remove the worn finger by removing the M3 screws.
- Clean the rack and dry thoroughly.
- Insert the new finger on the rack.
- Fix the finger using the provided M3 screws, apply low strength thread locker to the M3 screw threads.
- Repeat for remaining finger.

In order to replace a fingertip:

- Remove the worn fingertip by removing the M3 screws.
- Clean the fingertip holder and dry thoroughly.
- Insert the new fingertip in the fingertip holder.
- Fix the fingertip using the provided M3 screws, apply low strength thread locker to the M3 screw threads.
- Repeat for remaining fingertip.

7.2. Periodic inspection

Maintenance Interval	Tools You Need	Parts You Need
Monthly	• 4 mm hex key • Dry tissue or towel • Medium strength thread locker	None (unless damage is detected)

Info

Always turn off robot and Gripper power supply before performing maintenance operations on the Gripper.

1. Remove and clean the Gripper following instructions in the **Gripper cleaning** section
2. Inspect the Gripper
   - Finger movement must be symmetric and fluid; test opening and closing of the Gripper:
   - Finger or fingertip wear must not affect gripping, if wear is visible and affects movement, change accordingly (refer to the **Gripper cleaning** section)
   - Check for any collision damage, if damage is visible, contact support@robotiq.com
   - Check for any sign of wear on the Gripper chassis; if wear is present and may affect the Gripper, contact support@robotiq.com
3. Put back in place according to the instructions from the **Gripper cleaning** section

7.3. Rack & pinion mechanism cleaning

Maintenance Interval	Tools You Need	Parts You Need
Every 2M cycles or more frequently in dirty operating conditions	• 4 mm hex key • Dry tissue or towel • Medium strength thread locker	• Grease (Mobilith SHC1500 or equivalent) • Degreaser

> **Info**
>
> Always turn off robot and Gripper power supply before doing maintenance operations on the Gripper.

- Open the Gripper to an intermediate position, so you do not hide the 6 M5 screws holding the rack housing in place.
- Remove the Gripper from its coupling using the 4 mm hex key to unscrew the four (4) M5-0.8 x 25mm screws. Note that each screw uses a toothed lock washer, do not lose them.
- Remove the 6 M5 screws holding the rack housing.
- Gently pull the rack housing away from the body of the Gripper.
- Remove the pinion and key from the drive shaft, make sure you keep them in a safe space.
- The finger's racks will slide off freely from the rack housing. Clean the rack housing, the racks and the pinion using a degreaser. Dry thoroughly. Clean the fingers (finger holders and fingertips if that is the case) with a dry towel. Remove all debris, dirt and dust.
- Also clean the Gripper itself with a dry towel. Dry thoroughly.
- Clean the coupling with a dry towel, pay particular attention to the electrical contact.
- You can clean the Gripper according to the procedure described in the **Gripper cleaning** section.
- Visually inspect the Gripper and pay attention to any visible damage.
- Apply grease on the racks. Put it on **all surfaces except the face with the tapped holes**.

> **Info**
>
> Use Mobilith SHC1500 grease or an equivalent.

- Insert the pinion with the key in the keyhole on the shaft.
- Slide the racks back in the rack housing.
- Reinsert the rack housing with racks on the Gripper. Make sure the racks go in symmetricaly compared to the center of the gripper.
- Fix the 6 M5 screws to secure the rack housing.
- Put the gripper back on the coupling and fix it with the four (4) M5-0.8 x 25mm screws, use the tooth lock washers, apply medium strength thread locker to the M5 screws.

8. Spare Parts, Kits and Accessories

The following list is up-to-date at print time and is subject to change, check online for updates.

> **Info**
>
> Unless specified, screws, dowel pins and other hardware are included only for the Gripper side, never for the robot side.

Item	Description	Ordering Number
Hand-E Basic Gripper Unit	Hand-E basic gripper unit, includes aluminum fingers (HND-FIN-ALU-KIT)	HND-GRP-001
Kit for *Universal Robots (CB-Series)*	• Gripper basic unit (HND-GRP-001) • Fingertip starting kit (HND-TIP-START-KIT) • End-effector coupling kit (GRP-CPL-062) • 10-metre Robotiq device cable • RS485 to USB adapter • Screw kit • USB stick to install the UR software package	HND-UR-KIT
Kit for *Universal Robots (e-Series)*	• Gripper basic unit (HND-GRP-001) • Fingertip starting kit (HND-TIP-START-KIT) • End-effector coupling kit (GRP-ES-CPL-062) • Screw kit • USB stick to install the UR software package	HND-ES-UR-KIT
Controller	Optional controller for industrial communications see Robotiq Universal Controller Items	UNI-CTR-XXXX
Aluminum Finger Kit	Aluminum finger kit, includes: • 2 x basic aluminum finger • 1 x screw kit	HND-FIN-ALU-KIT
Fingertip Starting Kit	Fingertip Starting Kit includes: • 1 x Fingertip Holder Kit • 1 x V-Groove Fingertip Kit • 1 x Flat Rubber Fingertip Kit • 1 x hex head key	HND-TIP-START-KIT
Flat Silicone Fingertip Kit	Flat Silicone Fingertip Kit* includes: • 2 x flat rubber fingertip • 1 x screw kit	HND-TIP-SLC-KIT

Item	Description	Ordering Number
	*Silicone fingertips must be mounted on fingertip holders (HND-TIP-HLD-KIT)	
V-Groove Fingertip Kit	V-Groove Fingertip Kit* includes: • 2 x V-groove aluminum fingertip • 1 x screw kit *V-Groove fingertips must be mounted on fingertip holders (HND-TIP-HLD-KIT)	HND-TIP-VGR-KIT
Fingertip Holder Kit	Hand-E Fingertip Holder Kit includes: • 2 x fingertip holder • 1 x screw kit	HND-TIP-HLD-KIT
10m Device Cable	10 m Robotiq device cable for power and communication. Straight M12 5-pins female on one side, single ended on the other, shielded	CBL-COM-2065-10-HF
USB to RS485 adapter	USB to RS485 adapter, can be used with device cable for USB connection	ACC-ADT-USB-RS485
Hand-E Screw Kit	The screw kit contains: • 4 x M5 screws • 4 x Lock washer	HND-SCREW-KIT
16G USB Stick	USB stick to install the UR software package	ACC-USB-16G
End-Effector Coupling Kit	ISO 9409-1-50-4-M6 coupling for Adaptive Robot Grippers, with screws and tools for Gripper fixation and 1 m pigtail cable	GRP-CPL-062
Adapter plate to 63-4M6-61_4-2D6	Wrist adapter plate for use with AGC-CPL-064-002. Interface to 63 mm PCD[1] with (4) M6 screws and 61.4 mm PCD 1 with (2) M6 indexing pins	AGC-APL-152-002
Adapter plate to 80-6M8-2D82D8	Wrist adapter plate for use with AGC-CPL-064-002. Interface to 80 mm PCD[1] with (6) M8 screws and (2) M8 indexing pins	AGC-APL-153-002

[1] *Pitch Circle Diameter*

To install Hand-E on a robot that has a different bolt pattern than part GRP-CPL-062 (ISO 9409-1-50-4-M6), you can use one of the following. The couplings listed below fit with both Hand-E and the 2-Finger Gripper.

Item	Description	Ordering Number
Blank coupling	Blank coupling for Adaptive Robot Grippers, with screws for Gripper fixation and 1 m pigtail cable	AGC-CPL-BLANK-002
ISO 9409-1-50-4-M6 (cable-to-controller)	ISO 9409-1-50-4-M6 coupling for Robot Grippers with screws for Gripper fixation and 1 m pigtail cable	GRP-CPL-062
ISO 9409-1-50-4-M6 (cable-to-wrist)	ISO 9409-1-50-4-M6 coupling for Robot Grippers with screws for Gripper fixation	GRP-ES-CPL-062
ISO 9409-1-31.5-4-M5 coupling	ISO 9409-1-31.5-4-M5 coupling for Adaptive Robot Grippers, with	AGC-CPL-063-002

Item	Description	Ordering Number
	screws for Gripper fixation and 1 m pigtail cable	
ISO 9409-1-40-4-M6 coupling	ISO 9409-1-40-4-M6 coupling for Adaptive Robot Grippers, with screws for Gripper fixation and 1 m pigtail cable	AGC-CPL-064-002
56-8M4-1D4 coupling	Coupling for 56 mm PCD[1] with (8) M4 and (1) 4mm indexing pin, with screws for Adaptive Robot Grippers fixation and 1 m pigtail cable	AGC-CPL-065-002
56-6M4-1D6 coupling	Coupling for 56 mm PCD[1] with (6) M4 and (1) 6mm indexing pin, with screws for Adaptive Robot Grippers fixation and 1 m pigtail cable	AGC-CPL-066-002
60-4Ø5-1D5 coupling	Coupling for 60 mmPCD[1] with (4) M5 thread and (1) 5mm indexing pin, with screws for Adaptive Robot Grippers fixation and 1 m pigtail cable	AGC-CPL-067-002
63-6M6-2D6 coupling	Coupling for 63 mm PCD[1] with (6) M6 and (2) 6mm indexing pins, with screws for Adaptive Robot Grippers fixation and 1 m pigtail cable	AGC-CPL-068-002
40-4M5-1D3 coupling	Coupling for 40 mm PCD[1] with (4) M5 and (1) 3mm indexing pins, with screws for Adaptive Robot Grippers fixation and 1 m pigtail cable	AGC-CPL-070-002
31.5-4M4 coupling	Coupling for 31.5 mm PCD[1] with (4) M4, with screws for Adaptive Robot Grippers fixation and 1 m pigtail cable	AGC-CPL-071-002
Adapter plate to 63-4M6-71-2D3	Wrist adapter plate for use with AGC-CPL-064-002. Interface to 63 mm PCD[1] with (4) M6 screws and 71 mm PCD[1] with (2) M3 indexing pins	AGC-APL-151-002
Adapter plate to 63-4M6-61_4-2D6	Wrist adapter plate for use with AGC-CPL-064-002. Interface to 63 mm PCD[1] with (4) M6 screws and 61.4 mm PCD 1 with (2) M6 indexing pins	AGC-APL-152-002
Adapter plate to 80-6M8-2D82D8	Wrist adapter plate for use with AGC-CPL-064-002. Interface to 80 mm PCD[1] with (6) M8 screws and (2) M8 indexing pins	AGC-APL-153-002

[1]*Pitch Circle Diameter*

9. Troubleshooting

When using Hand-E with a USB to RS485 serial converter:

Troubleshooting from the Gripper LED

1. LED is not lit: Gripper not powered.
    a. Check Gripper power supply and electrical setup, see Section 3.5.
2. LED is solid blue and red: Gripper is in fault.
    a. Disconnect the communication and power cycle the Gripper. The led should turn solid red when powered.
    b. While powered with red LED, connect the communication, LED should turn solid blue when connection is established.
3. Flashing blue and red LEDs: Gripper is in fault.
    a. Gripper may be in auto-release, wait for auto-release to be completed, then turn off auto-release and initialize the Gripper.
    b. Gripper may have a major fault, check the error from fault status and contact support.
4. Solid blue LED: no fault and communicating.
    a. If you can control the Gripper from the GUI on the pendant, check your program structure.
    b. If you can not control the Gripper from the pendant, contact support.
5. Solid red LED: no fault, but Gripper is not communicating.
    a. USB-RS485 converter LEDs are :
        - Not lit: no USB communication.
            i. Check USB connection.
            ii. Re-install drivers.
            iii. Contact support.
        - Red LED flashes at slow rate.
            i. Check the DB-9 connector.
            ii. Check the cable.
            iii. Check the communication parameters from the Robotiq User Interface, see recovery procedure.
            iv. Contact support.
        - Red and green LEDs flashing at high speed.
            i. Check fault status, maximum operating temperature could be exceeded.
            ii. Contact support.

When using Hand-E with Universal Robots package:

Troubleshooting from the previous section (LED references) still applies.

From the UR teach pendant

URCap installation:

1. Verify that the latest URCap is installed from the "Robot Setup" menu, inside the "URCaps" tab
    a. URCaps installation instructions can be found in the **URCap Package** section
    b. Inside the URCaps menu, if you select the appropriate URCap file, you can see the current software version
    c. Gripper toolbar should appear if installed properly
2. URCap is installed but Gripper cannot be controlled:
    a. If Gripper LED is not blue, follow the steps in the section above
    b. If Gripper LED is blue, URCap is installed with the latest available version, contact support@robotiq.com

10. Warranty and Patent

Robotiq warrants Hand-E against defects in material and workmanship for a period of one year from the date of reception when utilized as intended. Robotiq also warrants that this equipment will meet applicable specifications under normal use.

The warranty applies under the following conditions:

- Usage respects the operating and storage conditions specified in the **Environmental and Operating Conditions** section
- Proper installation of the Gripper specified in the **Installation** section and following subsections.
- Until a 2 000 000 cycle count[1] has been reached.
- Usage respects maintenance specified in the **Maintenance** section.
- Usage respects recommended payload and forces specified in the **Mechanical specifications** section.

---

[1] *Cycle count: One (1) cycle is defined as an object picking attempt, successful or not(open or closing onto an object, or closing on itself). It is calculated in the internal memory of the Hand-E Gripper and can been seen on the teach pendant when using with Universal Robots or with the Robotiq User Interface.*

During the warranty period, Robotiq will repair or replace any defective Hand-E, as well as verify and adjust the Gripper free of charge if the equipment should need to be repaired or if the original adjustment is erroneous. If the equipment is sent back for verification during the warranty period and found to meet all published specifications, Robotiq will charge standard verification fees.

The unit is considered defective when at least one of the following conditions occurs:

- The Gripper fingers cannot close or open;
- The Gripper feedback necessary for the robot program is not accessible.

Parts that come into contact with the work piece and wearing parts such as the finger and fingertips are not covered by the warranty.

> **Caution**
>
> The warranty will become null and void if:
>
> - The unit has been tampered with, repaired or worked on by unauthorized individuals.
> - The warranty sticker has been removed.
> - The screws, other than as explained in this guide, have been removed.
> - The unit has been opened other than as explained in this guide.
> - Unit serial number has been altered, erased, or removed.
> - Unit has been misused, neglected, or damaged by accident.

This warranty is in lieu of all other warranties expressed, implied, or statutory, including, but not limited to, the implied warranties of merchantability and fitness for a particular purpose. In no event shall Robotiq be liable for special, incidental, or consequential damages.

Robotiq shall not be liable for damages resulting from the use of the Hand-E, nor shall Robotiq be responsible for any failure in the performance of other items to which Hand-E is connected or the operation of any system of which the Gripper may be a part.

11. Contact

www.robotiq.com

Contact Us

Phone

1-888-ROBOTIQ (762-6847)
(+1) 418-380-2788 Outside US and Canada

Fax

1-418-800-0046

Technical support

option 3

Sales

option 2

Head office

Robotiq
966, chemin Olivier
Suite 500
Lévis, Québec
G7A 2N1
Canada

Where automation Pros come to share their know-how and get answers.

dof.robotiq.com

12. Harmonized Standards, Declarations and Certificates

12.1. Translation of original EC declaration of incorporation

ROBOTIQ

Translation of Original Declaration of Incorporation

In terms of the Directive 2006/42/EC, Annex II, part B of the European Parliament and of the Council on machinery, we, the manufacturer,

Robotiq Inc.
966, Chemin Olivier, suite 500
Lévis, Québec, Canada, G7A 2N1

hereby declares that the following product:

Robotiq Hand-E Gripper

meets the applicable requirements of the **Machinery Directive 2006/42/EC** of the European Parliament and of the Council. The incomplete machine may not be operated until the machine in which it is integrated has been declared compliant with the relevant provisions of the 2006/42/CE Machinery Directive.

The manufacturer agrees to forward upon request of national competent authorities the relevant technical documents specified by Annex VII, part B, within the required time.

Additionally, the product declares in conformity with the following directives, according to which the product is CE marked:

2011/65/EU Restriction of the use of certain hazardous substances (RoHS)

Person responsible for documentation: Annick Mottard, Jr. Eng., address: see manufacturer address

Lévis, May 2018

Jean-Philippe Jobin
Vice President Research and Development
Robotiq Inc.

The following standards have been applied:

NF EN ISO 12100	2010	Safety of machinery – General principles for design – Risk assessment and risk reduction
CEI 60204-1 Ed6.0	2016	Safety of machinery – Electrical equipment of machines – Part 1: General requirements
NF EN ISO 14539	2000	Manipulating industrial robots – Object handling with grasp-type grippers – Vocabulary and presentation of characteristics
NF EN ISO 9409-1 2004	2004	Manipulating industrial robots – Mechanical interfaces – Part 1: Plates

12.2. Applied standards

This section describes all applied harmonized standards for the design and production of the Robotiq Hand-E Gripper. Standards are applied were applicable, some points may not be applied if not applicable to this specific product. Conformity is not enforced by any laws, it is self-applied and the aim is to define normal safety and performance requirements for similar products.

> **Caution**
>
> Conformity of the product is only met if all instructions of this manual are followed. Among others: installation, safety measures and normal usage must be met.

The following standards have been applied:

NF EN ISO 12100	2010	Safety of machinery – General principles for design – Risk assessment and risk reduction
CEI 60204-1 Ed6.0	2016	Safety of machinery – Electrical equipment of machines – Part 1: General requirements
NF EN ISO 14539	2000	Manipulating industrial robots – Object handling with grasp-type grippers – Vocabulary and presentation of characteristics
NF EN ISO 9409-1 2004	2004	Manipulating industrial robots – Mechanical interfaces – Part 1: Plates

12.3. Ingress Protection Certificate

October 12th 2018

Purpose: Ingress Protection (IP67) – Hand-E Test Certificate

To whom it may concern,

This certificate is to attest that Ingress Protection (IP) tests were carried out by NTS Canada in the months of June and July 2018 on Hand-E units manufactured by Robotiq. No ingress of dust or water was observed inside the units after the tests. No insertion of the rod or induced damage was observed. No functional anomaly was noticed or reported by the Robotiq engineering representative on-site during the tests. This test certificate does not supersedes the test report FTR0201898 Rev 00 issued by NTS Canada.

The acceptance status for the units tested is "PASS" for the following tests;

- Ingress protection against access to hazardous parts – Rod (code IP6X)
- Ingress protection against solid foreign objects - Dust (code IP6X)
- Ingress protection against immersion in water (code IPX7)

Sincerely yours,

Jean-Pierre Rioux

Digitally signed by Jean-Pierre Rioux
DN: cn=Jean-Pierre Rioux, o, ou=NTS Canada inc., email=Jean-Pierre.Rioux@NTS.com, c=CA
Date: 2018.10.12 11:31:11 -04'00'

Jean-Pierre Rioux, P. Eng.
Lab Manager
National Technical Systems Canada inc.
2425 Industrial Blvd
Chambly, Quebec
J3L 4W3 Canada